Service Manual

SA-11S1 /F1N /L1G /N1G /S1G /U1G /N1S

Super Audio CD Player

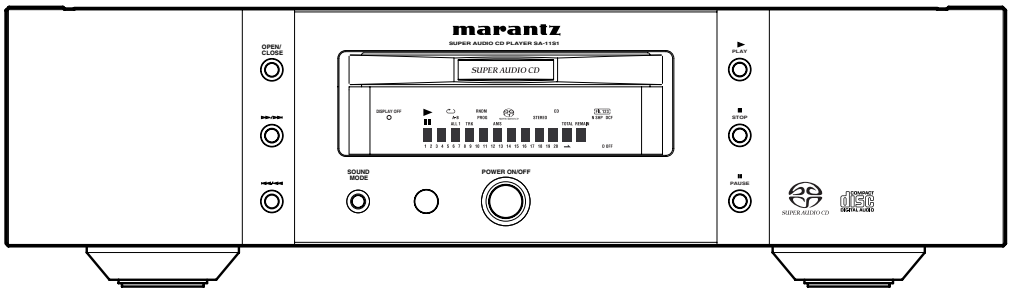

SUPER AUDIO CD

COMPACT disc DIGITAL AUDIO

TABLE OF CONTENTS

PAGE

SECTION 1

1. TECHNICAL SPECIFICATIONS 1-1
2. SERVICE HINTS AND TOOLS 1-2
3. WARNING AND LASER SAFETY INSTRUCTIONS 1-3
4. TAKING THE DISC OUT OF EMERGENCY 1-4
5. SERVICE MODE 1-4
6. L/R OUTPUT LEVEL ADJUSTMENT PROCEDURE 1-6
7. WIRING DIAGRAM 1-7
8. BLOCK DIAGRAM 1-8
9. SCHEMATIC DIAGRAM 1-9
10. PARTS LOCATION 1-14
11. IC DATA 1-17
12. EXPLODED VIEW AND PARTS LIST 1-22
13. ELECTRICAL PARTS LIST 1-26

SECTION 2

MECHA LOADER AND MECHA TRAVERSE

1. EXPLODED VIEW AND PARTS LIST 2-1

SECTION 3

SUPER AUDIO CD PCB MODULE

1. IC DATA 3-1
2. BLOCK DIAGRAM 3-22
3. SCHEMATIC DIAGRAM 3-23
4. PARTS LOCATION 3-29
5. ELECTRICAL PARTS LIST 3-30

Please use this service manual with referring to the user guide (D.F.U) without fail.
修理の際は、必ず取扱説明書を準備し操作方法を確認の上作業を行ってください。

marantz®

SA-11S1

Part no. 90M18AK855010
First Issue 2004.08
ecm

MARANTZ DESIGN AND SERVICE

Using superior design and selected high grade components, **MARANTZ** company has created the ultimate in stereo sound. Only original **MARANTZ** parts can insure that your **MARANTZ** product will continue to perform to the specifications for which it is famous.
Parts for your **MARANTZ** equipment are generally available to our National Marantz Subsidiary or Agent.

ORDERING PARTS :

Parts can be ordered either by mail or by Fax.. In both cases, the correct part number has to be specified.
The following information must be supplied to eliminate delays in processing your order :

1. Complete address
2. Complete part numbers and quantities required
3. Description of parts
4. Model number for which part is required
5. Way of shipment
6. Signature : any order form or Fax. must be signed, otherwise such part order will be considered as null and void.

USA
MARANTZ AMERICA, INC
1100 MAPLEWOOD DRIVE
ITASCA, IL. 60143
USA
PHONE : 630 - 741 - 0300
FAX : 630 - 741 - 0301

EUROPE / TRADING
MARANTZ EUROPE B.V.
P. O. BOX 8744, BUILDING SILVERPOINT
BEEMDSTRAAT 11, 5653 MA EINDHOVEN
THE NETHERLANDS
PHONE : +31 - 40 - 2507844
FAX : +31 - 40 - 2507860

CANADA
MARANTZ CANADA INC.
5-505 APPLE CREEK BLVD.
MARKHAM, ONTARIO L3R 5B1
CANADA
PHONE : 905 - 415 - 9292
FAX : 905 - 475 - 4159

PROFESSIONAL **AMERICAS**
SUPERSCOPE TECHNOLOGIES, INC.
MARANTZ PROFESSIONAL PRODUCTS
2640 WHITE OAK CIRCLE, SUITE A
AURORA, ILLINOIS 60504 USA
PHONE : 630 - 820 - 4800
FAX : 630 - 820 - 8103

PROFESSIONAL **AUSTRALIA**
TECHNICAL AUDIO GROUP PTY, LTD
43-53 Bridge Rd.,
STANMORE NSW 2048
AUSTRALIA
PHONE : +61 - (0)2 - 9519 - 0900
FAX : +61 - (0)2 - 9519 - 0600

PROFESSIONAL **HONG KONG**
Jolly ProAudio Broadcast Engineering Ltd.
UNIT 2, 10F, WAH HUNG CENTRE,
41 HUNG TO ROAD, KWUN TONG, KLN.,
HONG KONG
PHONE : 852 - 21913660
FAX : 852 - 21913990

AUSTRALIA
QualiFi Pty Ltd,
24 LIONEL ROAD,
MT. WAVERLEY VIC 3149
AUSTRALIA
PHONE : +61 - (0)3 - 9543 - 1522
FAX : +61 - (0)3 - 9543 - 3677

THAILAND
MRZ STANDARD CO., LTD
746 - 754 MAHACHAI ROAD.,
WANGBURAPAPIROM, PHRANAKORN,
BANGKOK, 10200 THAILAND
PHONE : +66 - 2 - 222 9181
FAX : +66 - 2 - 224 6795

SINGAPORE
WO KEE HONG DISTRIBUTION PTE LTD
No.1 JALAN KILANG TIMOR
#08-03 PACIFIC TECH CENTRE
SINGAPORE 159303
PHONE : +65 6376 0338
FAX : +65 6376 0166

NEW ZEALAND
WILDASH AUDIO SYSTEMS NZ
14 MALVERN ROAD MT ALBERT
AUCKLAND NEW ZEALAND
PHONE : +64 - 9 - 8451958
FAX : +64 - 9 - 8463554

TAIWAN
PAI- YUING CO., LTD.
6 TH FL NO, 148 SUNG KIANG ROAD,
TAIPEI, 10429, TAIWAN R.O.C.
PHONE : +886 - 2 - 25221304
FAX : +886 - 2 - 25630415

MALAYSIA
WO KEE HONG ELECTRONICS SDN. BHD.
2ND FLOOR BANGUNAN INFINITE CENTRE
LOT 1, JALAN 13/6, 46200 PETALING JAYA
SELANGOR DARUL EHSAN, MALAYSIA
PHONE : +60 - 3 - 7954 8088
FAX : +60 - 3 - 7954 7088

JAPAN *Technical*
MARANTZ JAPAN, INC.
35- 1, 7- CHOME, SAGAMIONO
SAGAMIHARA - SHI, KANAGAWA
JAPAN 228-8505
PHONE : +81 42 748 1013
FAX : +81 42 741 9190

日本マランツ株式会社

本　社　〒228-8505
神奈川県相模原市相模大野7-35-1

KOREA
MK ENTERPRISES LTD.
ROOM 604/605, ELECTRO-OFFICETEL, 16-58,
3GA, HANGANG-RO, YONGSAN-KU, SEOUL
KOREA
PHONE : +822 - 3232 - 155
FAX : +822 - 3232 - 154

SHOCK, FIRE HAZARD SERVICE TEST :

CAUTION : After servicing this appliance and prior to returning to customer, measure the resistance between either primary AC cord connector pins (with unit NOT connected to AC mains and its Power switch ON), and the face or Front Panel of product and controls and chassis bottom.
Any resistance measurement less than 1 Megohms should cause unit to be repaired or corrected before AC power is applied, and verified before it is return to the user/customer.
Ref. UL Standard No. 6500.

In case of difficulties, do not hesitate to contact the Technical Department at above mentioned address.

1. TECHNICAL SPECIFICATIONS

	Super Audio CD	Audio CD
Audio Characteristics		
Analog output		
Channels	2channels	2channels
Frequency range	2Hz — 100kHz	2Hz — 20kHz
Frequency characteristics	2Hz — 50kHz (-3dB)	2Hz — 20kHz
Dynamic range	114dB (Filter 3)	100dB (Filter 3)
THD (1kHz)	0.0009% (Filter 3)	0.0020% (Filter 3)
wow & flutter	Precision of quartz	Precision of quartz
Output level		
Unbalanced	2.5V RMS stereo (Filter 3)	2.5V RMS stereo (Filter 3)
Balanced	5V RMS stereo (Filter 3)	5V RMS stereo (Filter 3)
Digital output		
output level (cinch JACK)	—	0.5Vp-p (75Ω)
output level (optical)	—	-19dBm
Optical Readout System		
Laser	AlGaAs	AlGaAs
Wave length	650nm	780nm
Signal format	**1-bit DSD**	**16-bit linear PCM**
Sampling frequency	2.8224MHz	44.1kHz

Power Supply

/F Version ..... AC 100V 50Hz/60Hz
/L Version ..... AC 110V 60Hz
/N Version ..... AC 230V 50Hz
/S Version ..... AC 230V 50Hz
/U Version ..... AC 120V 60Hz
Power Consumption 25W

Cabinet, etc.

Dimensions (Width × Height × Depth) ..... 440 × 123 × 418mm
Net weight 14.0kg
Operating temperatures ..... +5°C ~ +35°C
Operating humidity ..... 5 ~ 90% (without dew)

Accessories

- Remote control unit (RC-11SAS1) 1
  Dimensions (Width × Height × Depth) ..... 48.5 × 21.5 × 152.5mm
  Net weight 160g
- AAA (R03) Batteries 2
- AC Power cord 1
- Audio cable 1
- Remote connection Cable 1
- User's Guide 1

2. SERVICE HINTS AND TOOLS

SERVICE HINTS

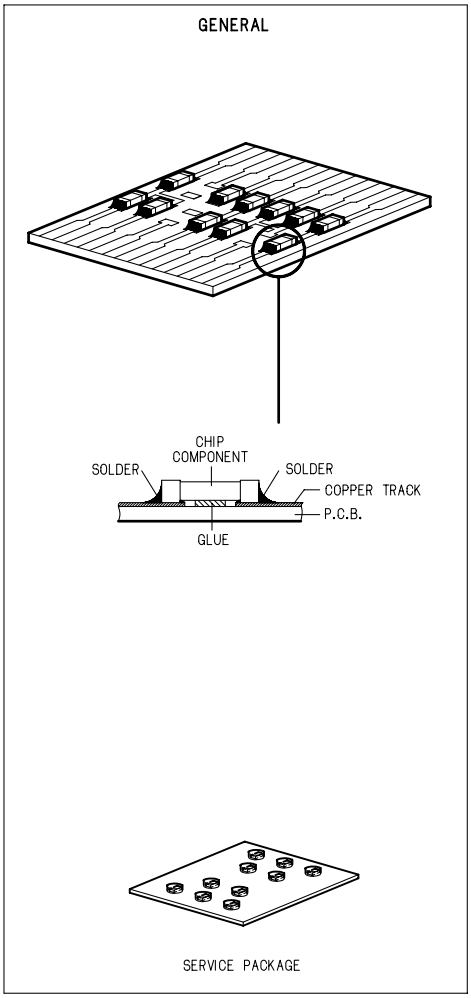

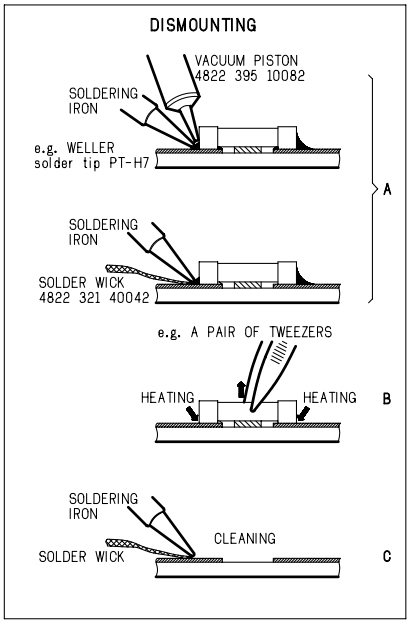

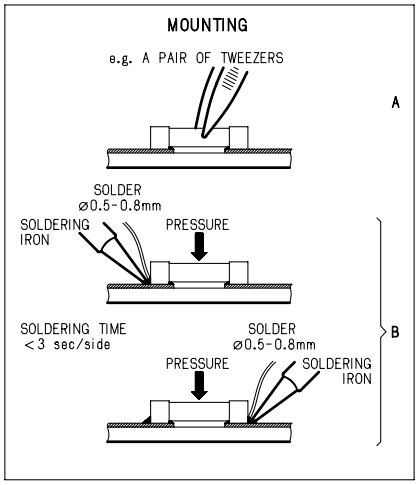

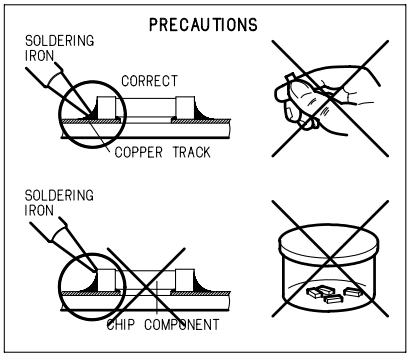

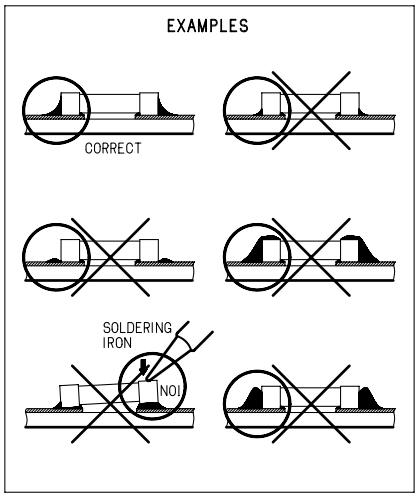

SERVICE TOOLS

Audio signals disc	4822 397 30184
Disc without errors (SBC444)+	
Disc with DO errors, black spots and fingerprints (SBC444A)	4822 397 30245
Disc (65 min 1kHz) without no pause	4822 397 30155
Max. diameter disc (58.0 mm)	4822 397 60141
Torx screwdrivers	
Set (straight)	4822 395 50145
Set (square)	4822 395 50132
13th order filter	4822 395 30204
DVD test disc (PAL)	4822 397 10131
DVD test disc (NTSC) ALMEDIO	TDV-540

3. WARNING AND LASER SAFETY INSTRUCTIONS

GB **WARNING**

All ICs and many other semi-conductors are susceptible to electrostatic discharges (ESD).
Careless handling during repair can reduce life drastically.
When repairing, make sure that you are connected with the same potential as the mass of the set via a wrist wrap with resistance.
Keep components and tools also at this potential.

ESD

NL **WAARSCHUWING**

Alle IC's en vele andere halfgeleiders zijn gevoelig voor elektrostatische ontladingen (ESD).
Onzorgvuldig behandelen tijdens reparatie kan de levensduur drastisch doen verminderen.
Zorg ervoor dat u tijdens reparatie via een polsband met weerstand verbonden bent met hetzelfde potentiaal als de massa van het apparaat.
Houd componenten en hulpmiddelen ook op ditzelfde potentiaal.

F **ATTENTION**

Tous les IC et beaucoup d'autres semi-conducteurs sont sensibles aux décharges statiques (ESD).
Leur longévité pourrait être considérablement écourtée par le fait qu'aucune précaution n'est prise a leur manipulation.
Lors de réparations, s'assurer de bien être relié au même potentiel que la masse de l'appareil et enfiler le bracelet serti d'une résistance de sécurité.
Veiller a ce que les composants ainsi que les outils que l'on utilise soient également a ce potentiel.

D **WARNUNG**

Alle IC und viele andere Halbleiter sind empfindlich gegen elektrostatische Entladungen (ESD).
Unsorgfältige Behandlung bei der Reparatur kann die Lebensdauer drastisch vermindern.
Sorgen sie dafür, das Sie im Reparaturfall über ein Pulsarmband mit Widerstand mit dem Massepotential des Gerätes verbunden sind.
Halten Sie Bauteile und Hilfsmittel ebenfalls auf diesem Potential.

I **AVVERTIMENTO**

Tutti IC e parecchi semi-conduttori sono sensibili alle scariche statiche (ESD).
La loro longevita potrebbe essere fortemente ridatta in caso di non osservazione della piu grande cauzione alla loro manipolazione.
Durante le riparazioni occorre quindi essere collegato allo stesso potenziale che quello della massa dell'apparecchio tramite un braccialetto a resistenza.
Assicurarsi che i componenti e anche gli utensili con quali si lavora siano anche a questo potenziale.

GB

Safety regulations require that the set be restored to its original condition and that parts which are identical with those specified be used.

NL

Veiligheidsbepalingen vereisen, dat het apparaat in zijn oorspronkelijke toestand wordt terug gebracht en dat onderdelen, identiek aan de gespecifieerde worden toegepast.

D

Bei jeder Reparatur sind die geltenden Sicherheitsvorschriften zu beachten.
Der Originalzustand des Gerats darf nicht verandert werden.
Fur Reparaturen sind Original-Ersatzteile zu verwenden.

I

Le norme di sicurezza esigono che l'apparecchio venga rimesso nelle condizioni originali e che siano utilizzati pezzi di ricambiago idetici a quelli specificati.

F

Les normes de sécurité exigent que l'appareil soit remis a l'état d'origine et que soient utilisées les pièces de rechange identiques à celles spécifiées.

"Pour votre sécurité, ces documents doivent être utilisés par des spécialistes agrées, seuls habilités à réparer votre appareil en panne."

LASER SAFETY

This unit employs a laser. Only a qualified service person should remove the cover or attempt to service this device, due to possible eye injury.

USE OF CONTROLS OR ADJUSTMENTS OR PERFORMANCE OF PROCEDURE OTHER THAN THOSE SPECIFIED HEREIN MAY RESULT IN HAZARDOUS RADIATION EXPOSURE.

AVOID DIRECT EXPOSURE TO BEAM

WARNING

The use of optical instruments with this product will increase eye hazard.
Repair handling should take place as much as possible with a disc loaded inside the player

WARNING LOCATION: INSIDE ON LASER COVERSHIELD

CAUTION VISIBLE AND INVISIBLE LASER RADIATION WHEN OPEN AVOID EXPOSURE TO BEAM
ADVARSEL SYNLIG OG USYNLIG LASERSTRÅLING VED ÅBNING UNDGÅ UDSÆTTELSE FOR STRÅLING
ADVARSEL SYNLIG OG USYNLIG LASERSTRÅLING NÅR DEKSEL Å PNES UNNGÅ EKSPONERING FOR STRÅLEN
VARNING SYNLIG OCH OSYNLIG LASERSTRÅLNING NÄR DENNA DEL ÄR ÖPPNAD BETRAKTA EJ STRÅLEN
VARO! AVATT AESSA OLET ALTTIINA NÄKYVÄLLE JA NÄKYMÄTTÖMÄLLE LASER SÄTEILYLLE. ÄLÄ KATSO SÄTEESEEN
VORSICHT SICHTBARE UND UNSICHTBARE LASERSTRAHLUNG WENN ABDECKUNG GEÖFFNET NICHT DEM STRAHL AUSSETSEN
DANGER VISIBLE AND INVISIBLE LASER RADIATION WHEN OPEN AVOID DIRECT EXPOSURE TO BEAM
ATTENTION RAYONNEMENT LASER VISIBLE ET INVISIBLE EN CAS D'OUVERTURE EXPOSITION DANGEREUSE AU FAISCEAU

4. TAKING THE DISC OUT OF EMERGENCY

To open the stucked tray, push the eject lever.

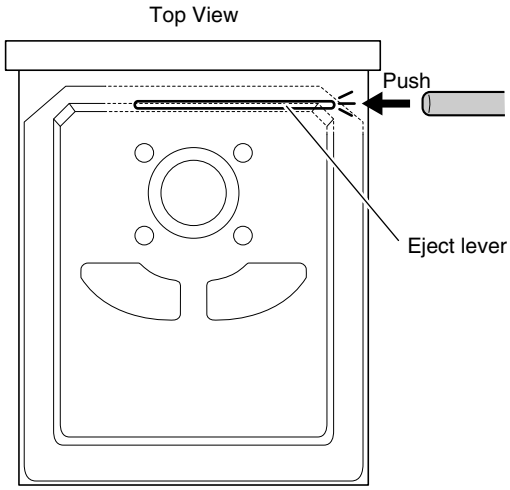

The eject lever is pointed by the arrow.

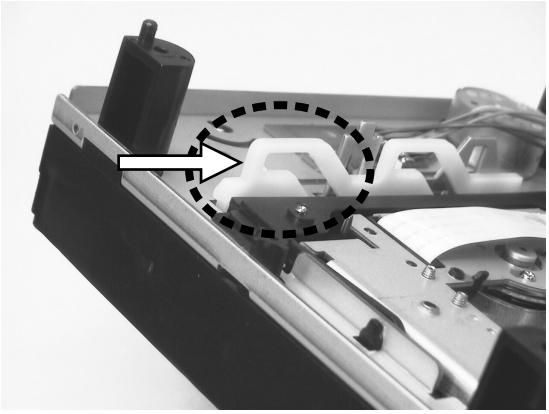

This picture shows the unit upside down.

5. SERVICE MODE

How to upgrade (IC731) by upgrade DISC. (90M-SA11S1DVD)

1. Press the **POWER** button while pressing the **PLAY** and **STOP** buttons.
2. Press the **OPEN/CLOSE** button to open the tray, Insert the update DVD-ROM (part No.:90M-SA11S1DVD).
3. Press the **SOUND MODE** and **STOP** buttons.
   The Display indicates “VERSION UP”.
4. Press the **OPEN/CLOSE** button to close the tray.
   The Display indicates “ TOC Reading” >>> “ FILE CHECK”>>> “ ERASE” >>> “ WRITING”.
5. Software updating will be done automatically.
   When the updating is finished, The disc tray opens automatically.
   (Updating takes about 1 minute.)
6. Remove the DVD-ROM from the disc tray.

Upgrade is completed, Press the **POWER** button to turn off the unit.

ソフトウエア (IC731) のアップデート方法

1. **PLAY** と **STOP** ボタンを押しながら **POWER** ボタンを押します。
2. **OPEN/CLOSE**ボタンを押し、トレイをオープンします。アップデートDVD-ROM（部品番号90M-SA11S1DVD）を挿入します。.
3. **SOUND MODE** と **STOP** ボタンを同時に押します。
   表示部には“VERSION UP”と表示されます。
4. **OPEN/CLOSE** ボタンを押します。
   表示部には“TOC Reading”>>>“FILE CHECK”>>>“ERASE”>>>“WRITING”の順に表示されます。
5. ソフトの書き換えは自動的に行われます。書き換えが終了するとディスクトレーは自動的にオープンします。
   （アップデートには約１分かかります。）
6. ディスクトレーからDVD-ROMを取り出します。

以上で、ソフトウエアのアップデートは完了です。
POWER ボタンを押し電源を切ります。

The error code is indicated when a problem DISC is inserted rst.
Press the **POWER** button While pressing **PLAY** and **OPEN/CLOSE** Button

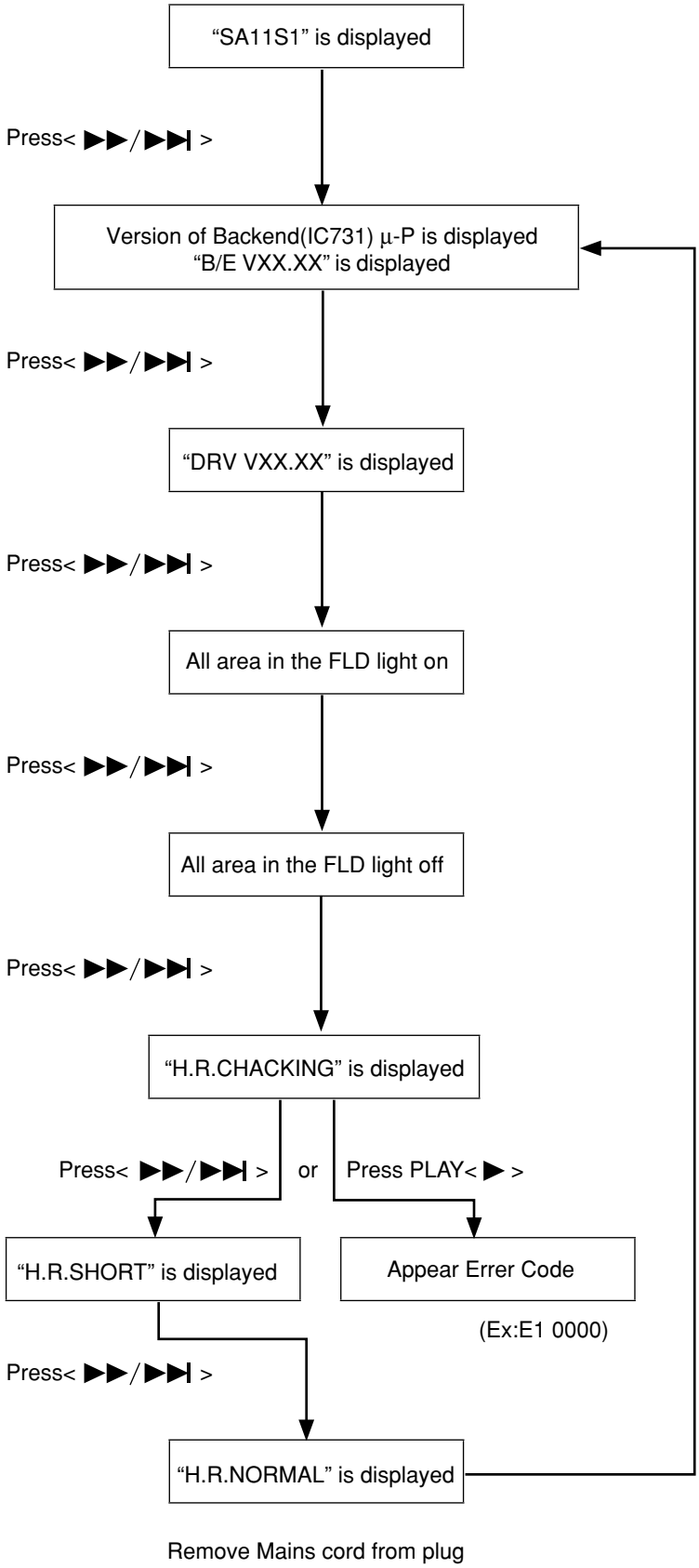

Errer Code

Error Code	Error
E1 XXXX	Operation time Error
E2 XXXX	T.O.C Error
E2 XXXX	Focus Error
E2 XXXX	Read Error
E4 XXXX	Tracking Error
E5 XXXX	Tray Error
E6 XXXX	Navigation Pack Read Error
E7 XXXX	Check Sum Eroor and NonAcknow I edgmen
NO DISC XXXX	NO disc

(XXXX: The Operation number of times to the error occurrence)

6. L/R OUTPUT LEVEL ADJUSTMENT PROCEDURE

Cases adjustment is needs

When a Q201 or Q251 is replaced.

Necessary equipments

AC voltmeter 2 sets (or Oscilloscope)
CD TEST DISC: CBC429 Audio signal disc1 (4822-397-30155)

Connection procedure

Connect the ANALOG OUTPUTS terminal (L/R) on the rear panel and AC voltmeter with cable as follow.

6. L/R出力レベル調整手順

調整が必要な場合

Q201 または Q251 を交換した時に調整が必要になります。

必要機器

交流電圧計　2台　（またはオシロスコープ）
CDテストディスク CBC429 Audio signal disc1 (4822-397-30155)

接続図

リアパネルにある ANALOG OUTPUTS 端子L、R をそれぞれ交流電圧計に接続します。

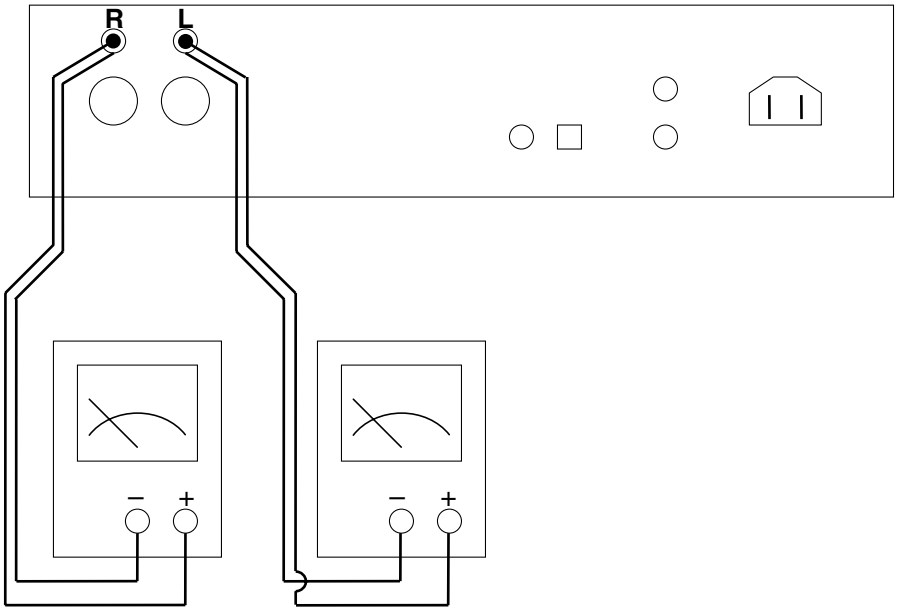

Adjustment procedure

Play back the Track 1 (1 kHz 0dB L+R) of the TEST DISC (SBC429).
Adjust trimming resister (R205) according to AC voltmeter readings of L ch output level and R ch output level.
The output level difference of the L ch and R ch is adjusted to less than 50mV.
If R205 is turned clockwise, the level of R ch will become large, and if it turns to anticlockwise rotation, the level of L ch will become large.

調整方法

テストディスク(SBC429)のTr.1（1kHz 0dB L+R)を再生します。
交流電圧計でL ch、R ch の出力レベル差 50mV 未満になるようにR205 で調整します。
R205を時計方向に回すとR chのレベルが大きくなり、半時計方向に回すとL ch のレベルが大きくなります。

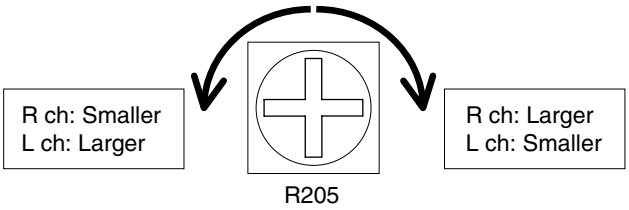

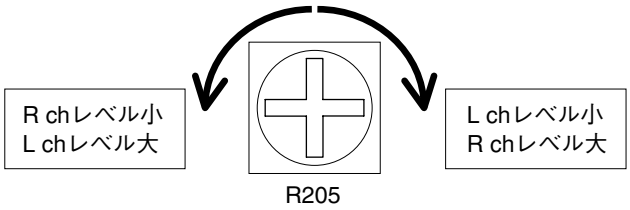

7. WIRING DIAGRAM

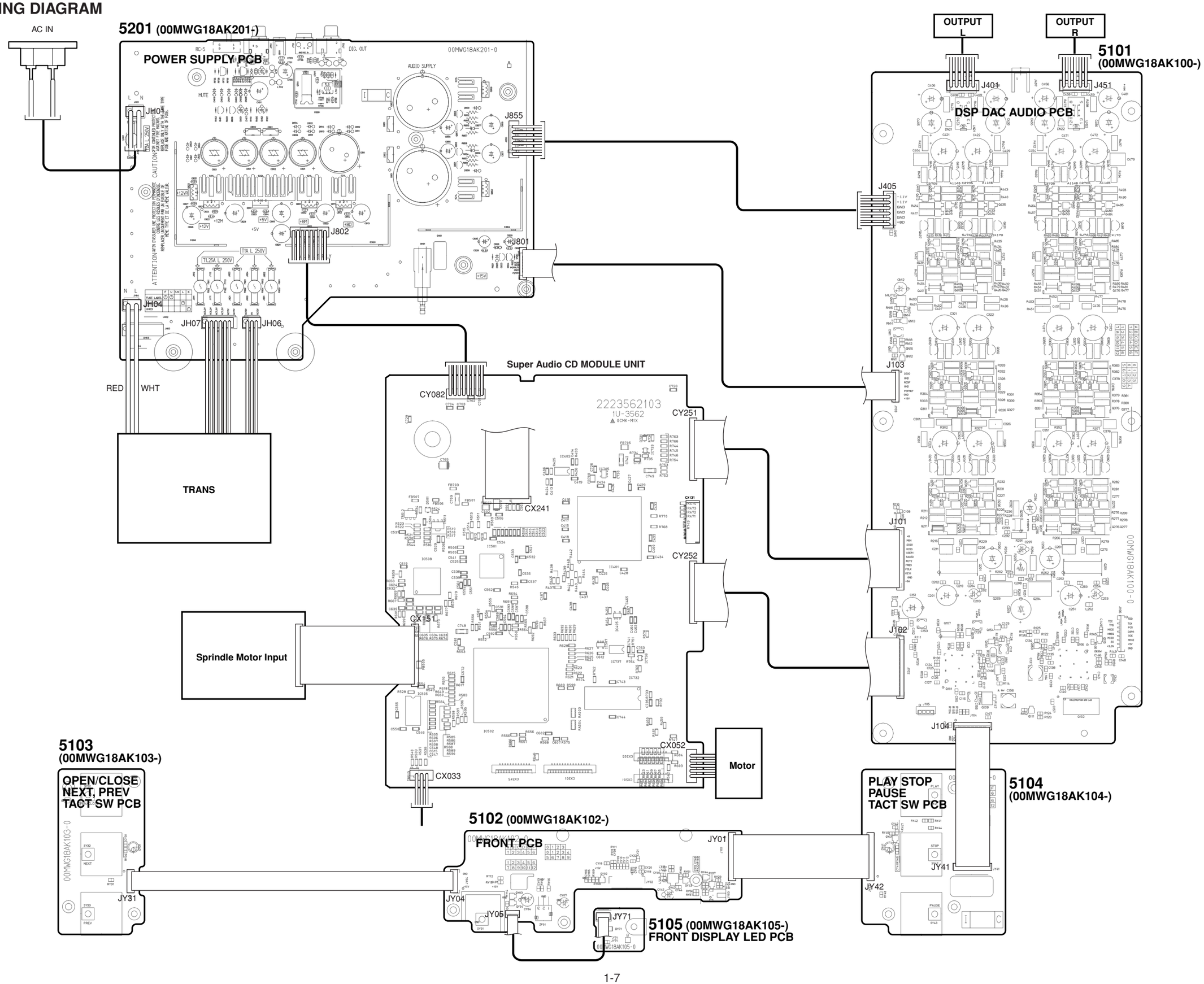

8. BLOCK DIAGRAM

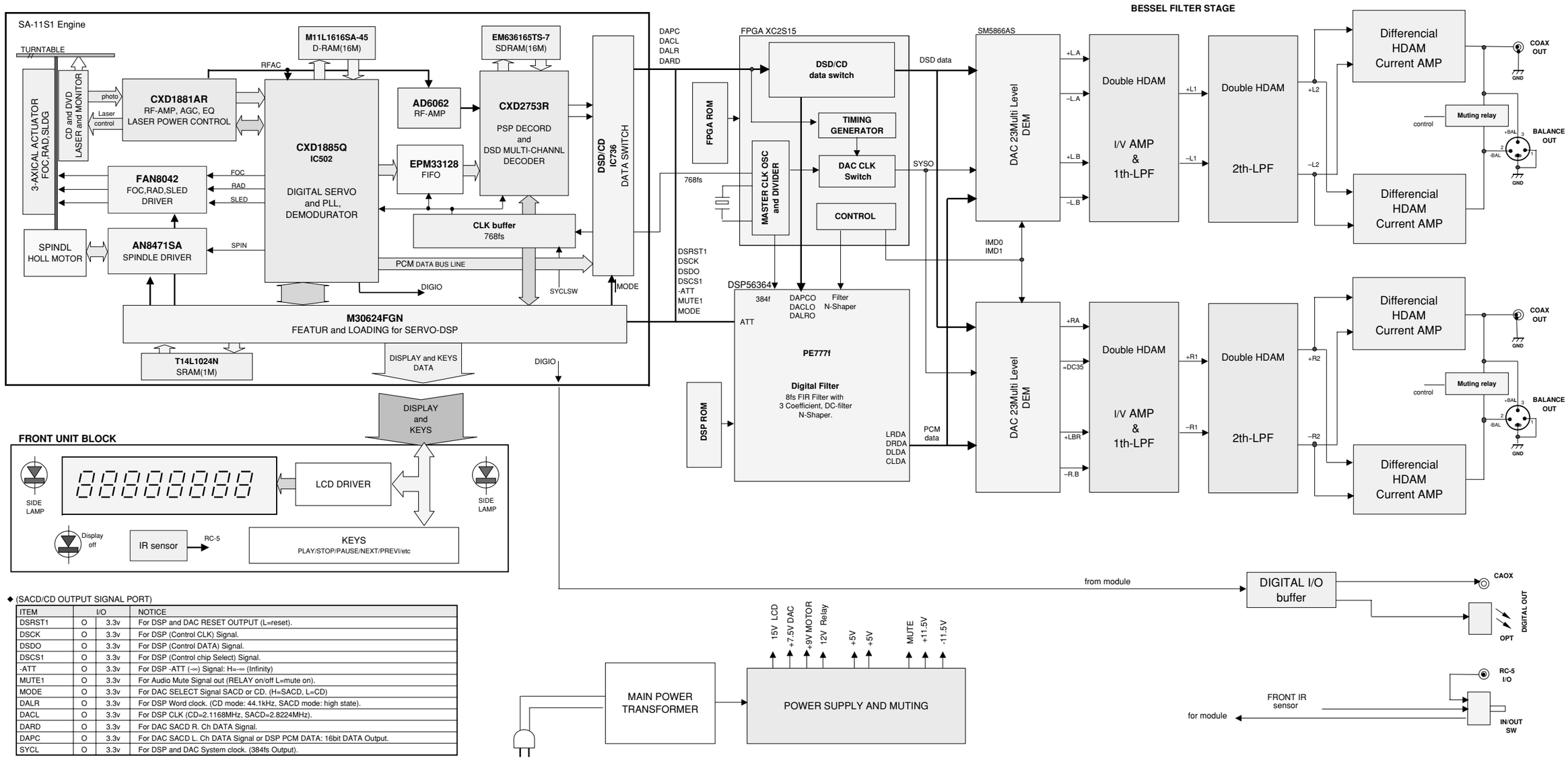

◆ (SACD/CD OUTPUT SIGNAL PORT)

ITEM	I/O		NOTICE
DSRST1	O	3.3v	For DSP and DAC RESET OUTPUT (L=reset).
DSCK	O	3.3v	For DSP (Control CLK) Signal.
DSDO	O	3.3v	For DSP (Control DATA) Signal.
DSCS1	O	3.3v	For DSP (Control chip Select) Signal.
-ATT	O	3.3v	For DSP -ATT (-∞) Signal: H=-∞ (Infinity)
MUTE1	O	3.3v	For Audio Mute Signal out (RELAY on/off L=mute on).
MODE	O	3.3v	For DAC SELECT Signal SACD or CD. (H=SACD, L=CD)
DALR	O	3.3v	For DSP Word clock. (CD mode: 44.1kHz, SACD mode: high state).
DACL	O	3.3v	For DSP CLK (CD=2.1168MHz, SACD=2.8224MHz).
DARD	O	3.3v	For DAC SACD R. Ch DATA Signal.
DAPC	O	3.3v	For DAC SACD L. Ch DATA Signal or DSP PCM DATA: 16bit DATA Output.
SYCL	O	3.3v	For DSP and DAC System clock. (384fs Output).

9. SCHEMATIC DIAGRAM

DSP DAC AUDIO 1/3
DATA INTERFACE

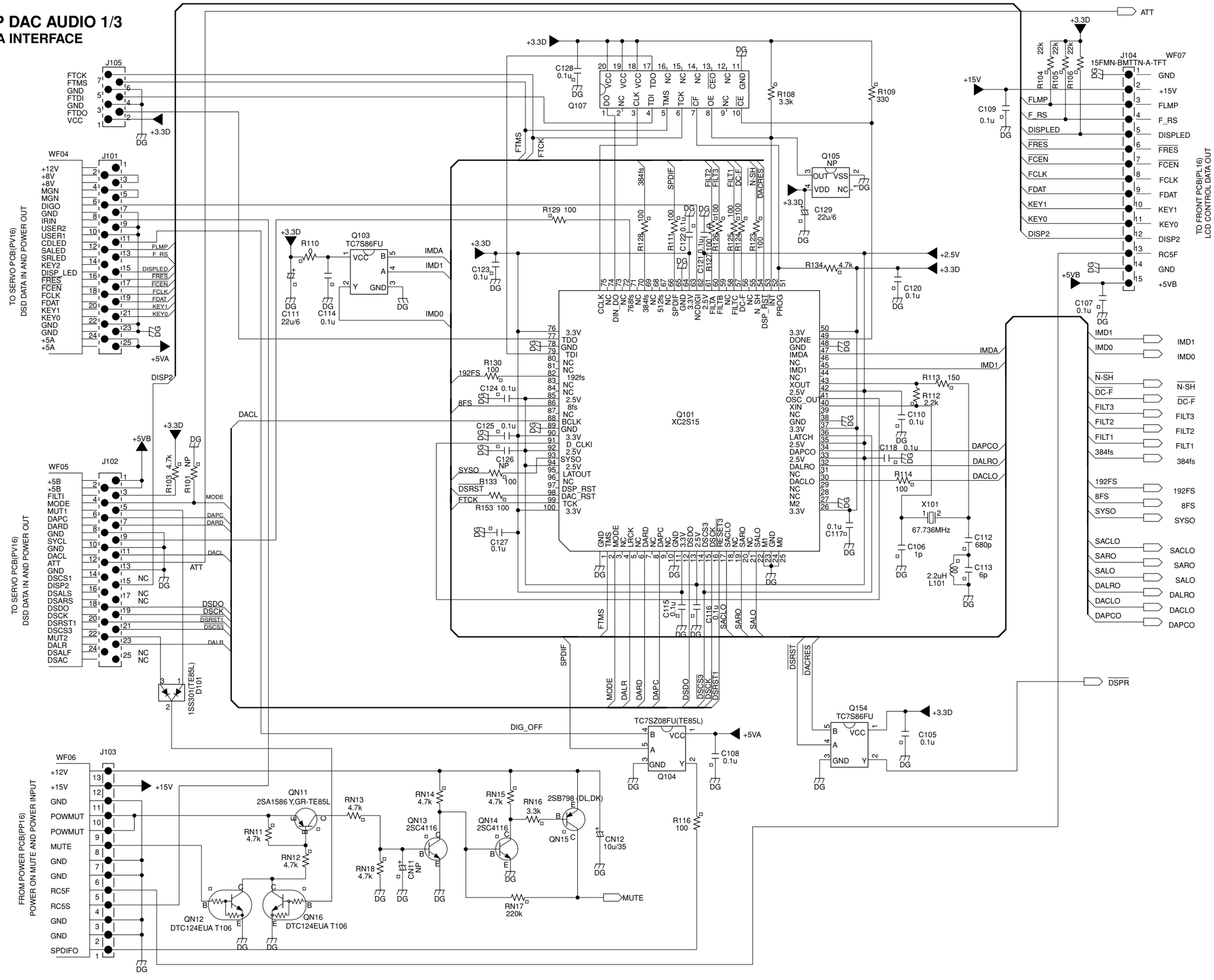

DSP DAC AUDIO 2/3

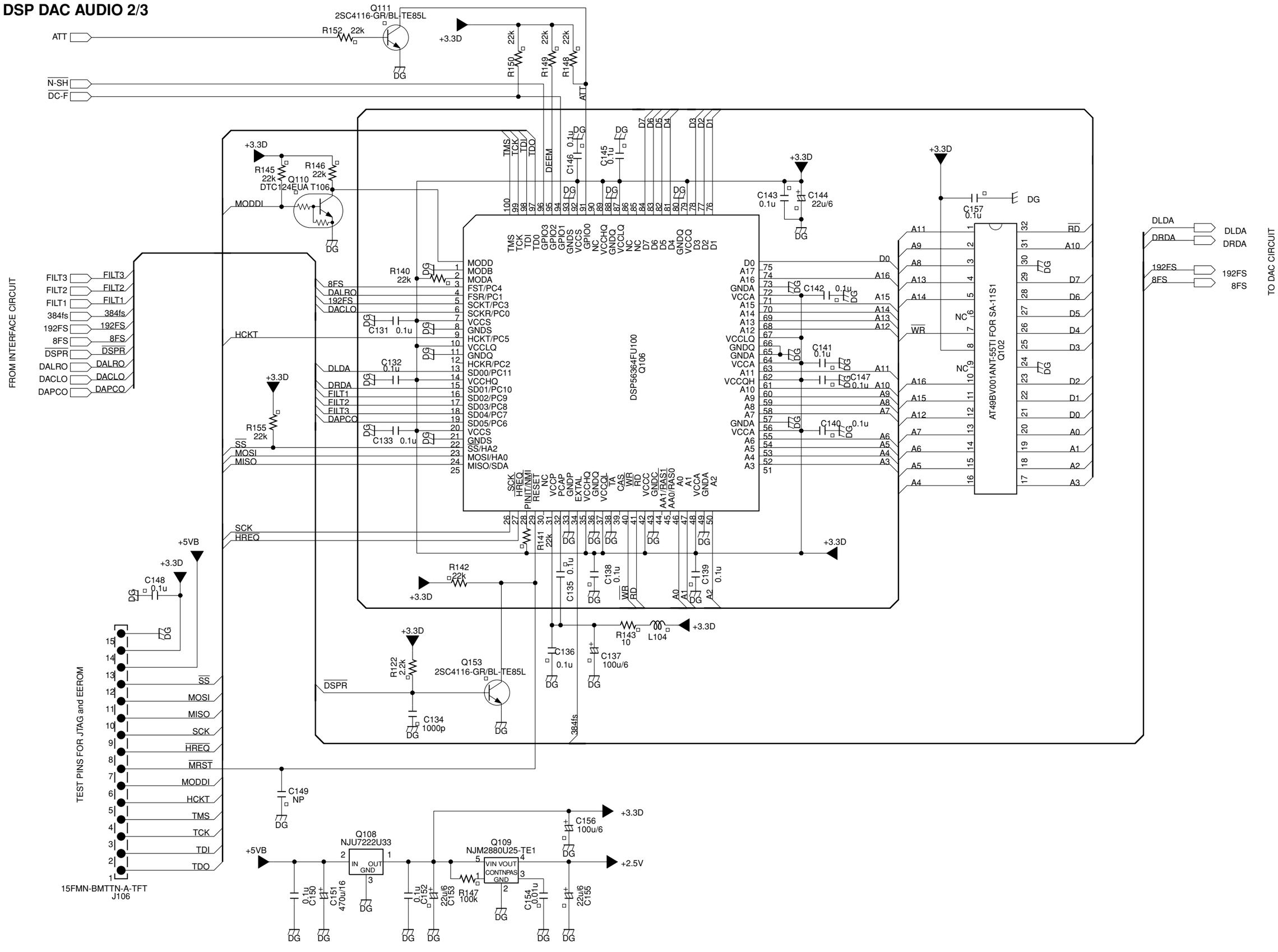

DSP DAC AUDIO 3/3

DAC/FILTER/BALANCE (LDA/LPF/LBA)

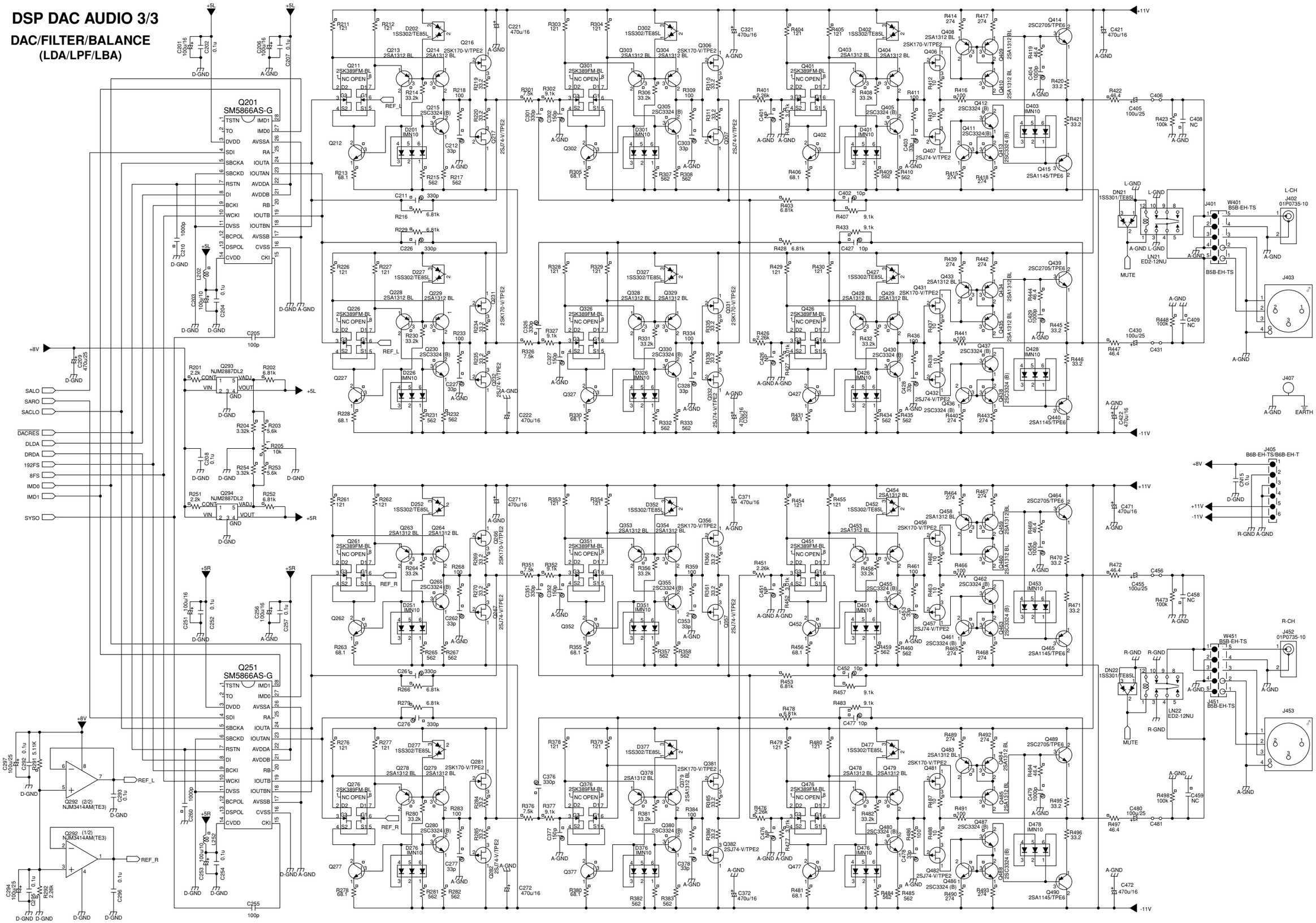

5103 (00MWG18AK103-)

OPEN/CLOSE NEXT, PREV TACT SW PCB

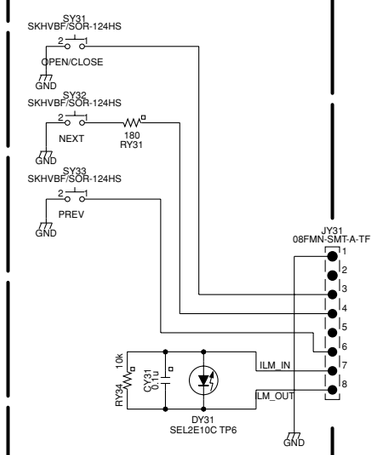

5102 (00MWG18AK102-)

FRONT

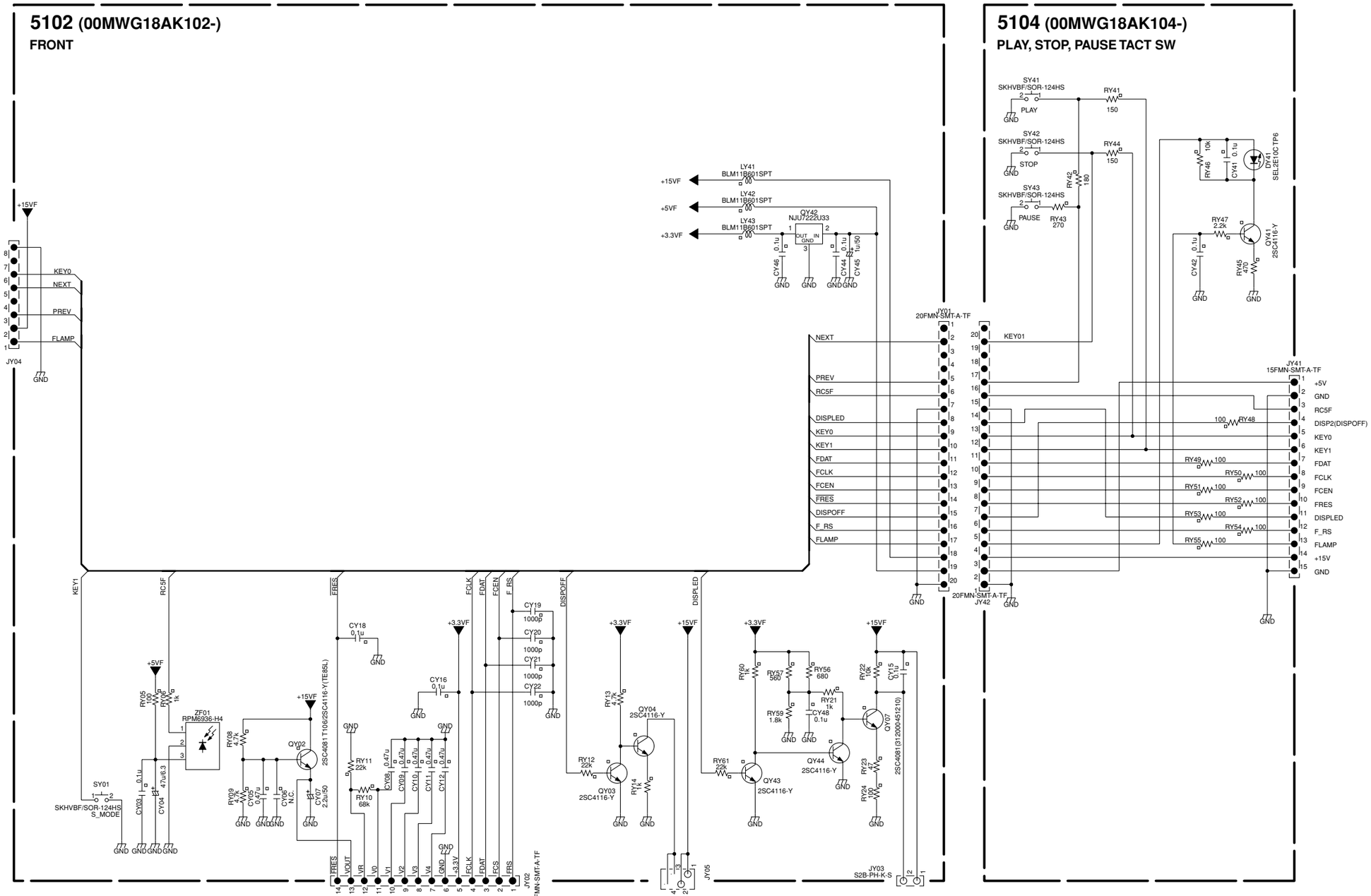

5104 (00MWG18AK104-)

PLAY, STOP, PAUSE TACT SW

LCD DISPLAY

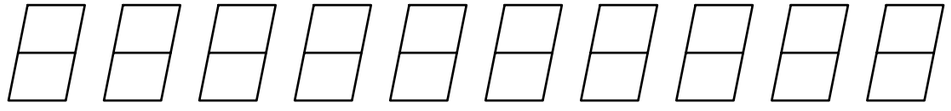

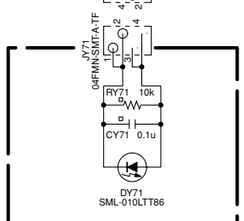

FRONT DISPLAY LED

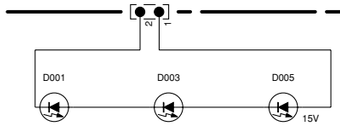

LCD BACK LIGHTING LED

5105 (00MWG18AK105-)

POWER SUPPLY

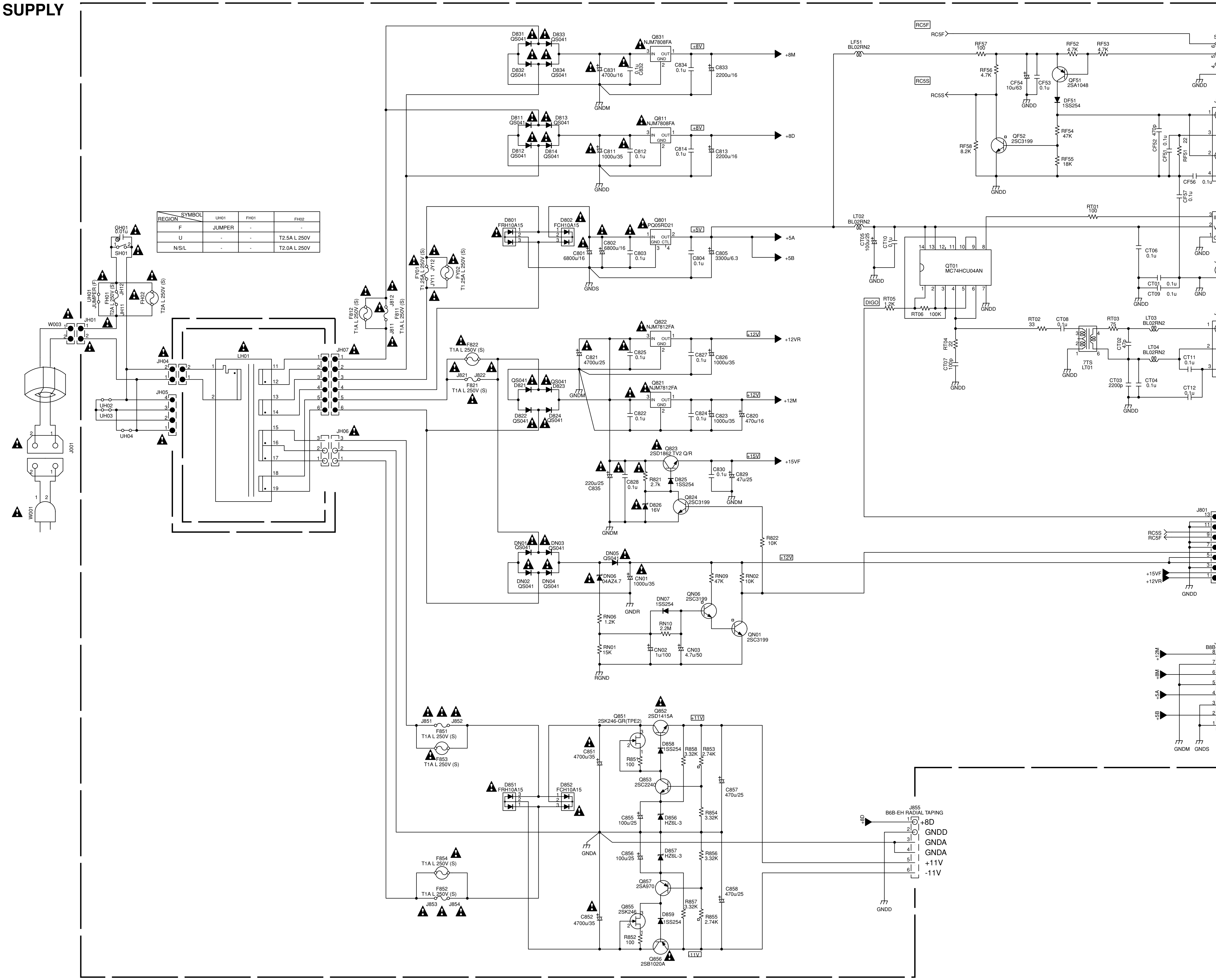

REGION \ SYMBOL	UH01	FH01	FH02
F	JUMPER	-	-
U	-	-	T2.5A L 250V
N/S/L	-	-	T2.0A L 250V

10. PARTS LOCATION

Q490 Q485 Q481 Q477 Q382 Q377 Q376 Q277 Q276 Q282 Q110
Q483 Q484 Q478 Q476
Q488 Q486 Q480 Q380 Q378 Q280 Q278 Q251 Q106 Q102
Q489 Q487 Q482 Q479 Q452 Q381 Q379 Q281 Q279
Q465 Q456 Q357 Q267
Q460 Q352 Q262
Q458 Q459 Q453 Q353 Q263
Q455 Q355 Q265
Q464 Q463 Q461 Q454 Q451 Q351 Q264 Q261 Q294 Q153 Q111
Q462 Q457 Q354 Q356 Q266 Q292 Q293 Q154
Q431 Q327 Q332 Q232 Q227 Q103
Q427 Q326 Q226 Q109
Q440 Q435 Q328
Q433 Q434 Q428 Q426 Q230 Q228
Q430 Q105
Q439 Q438 Q436 Q432 Q429 Q331 Q330 Q329 Q302 Q231 Q229 Q212
Q437 Q402 Q307 Q217 Q201
Q415 Q406 Q107 Q101
Q410 Q303 Q213
Q408 Q409 Q403 Q305 Q215 Q214 Q211
Q405 Q304 Q301 Q216
Q414 Q413 Q411 Q404 Q401 Q306
Q412 Q407 QN13 QN16 QN12 Q108
QN15 QN14 QN11 Q104

5101 00MWG18AK100-
DSP DAC AUDIO PCB

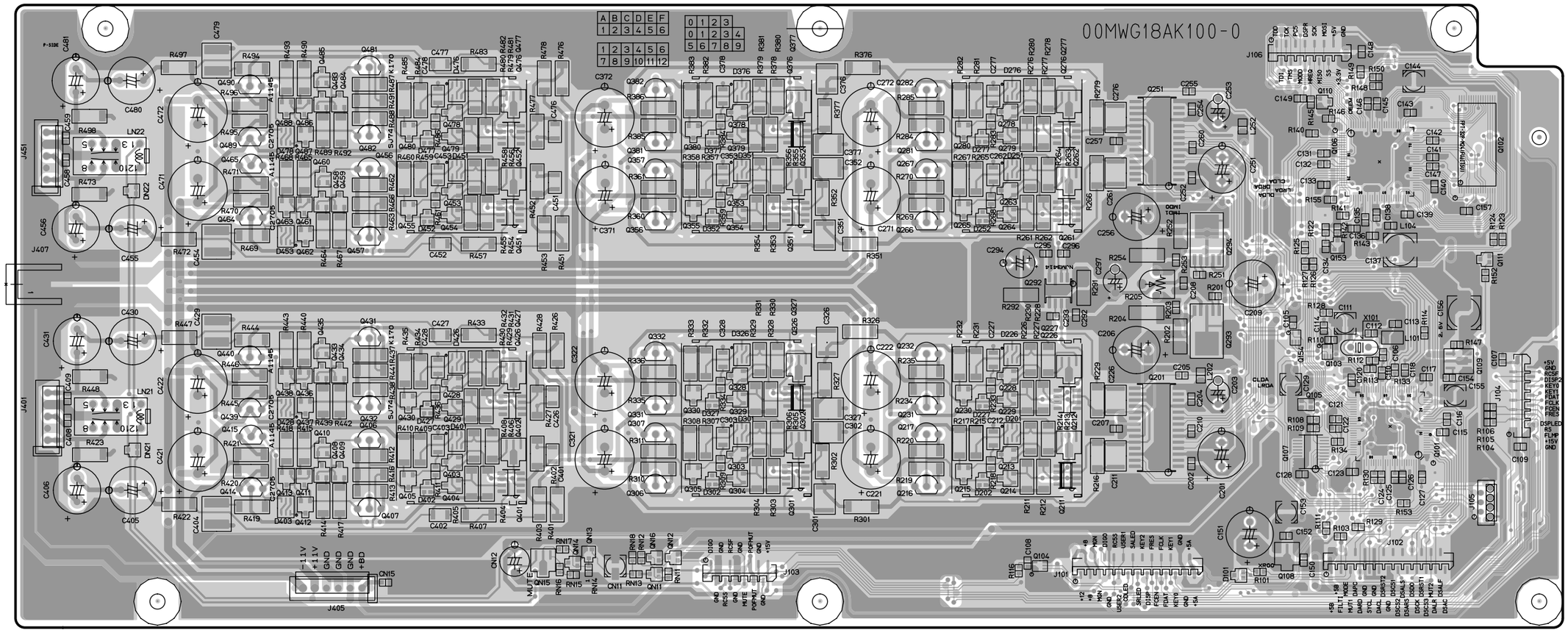

鉛フリー半田

半田付けには、鉛フリー半田（Sn-Ag-Cu）を使用してください。

Lead-free Solder

When soldering, use the Lead-free Solder (Sn-Ag-Cu).

QY44
QY02
QY42 QY43
QY07
QY03
QY04

5102 00MWG18AK102-
FRONT PCB

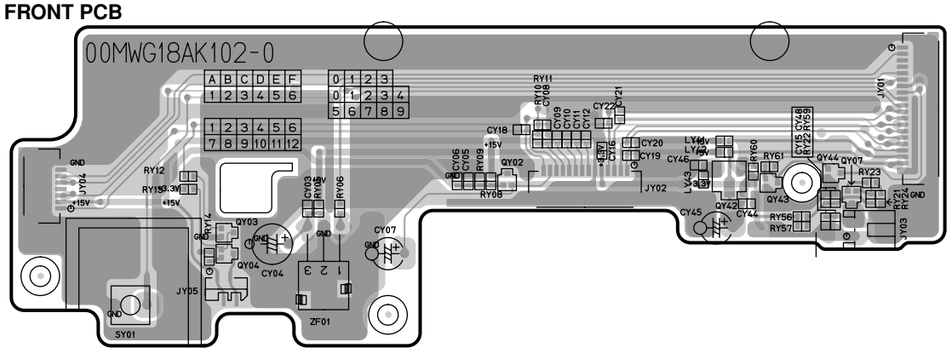

QY41

5104 00MWG18AK104-
PLAY, STOP, PAUSE TACT SW PCB

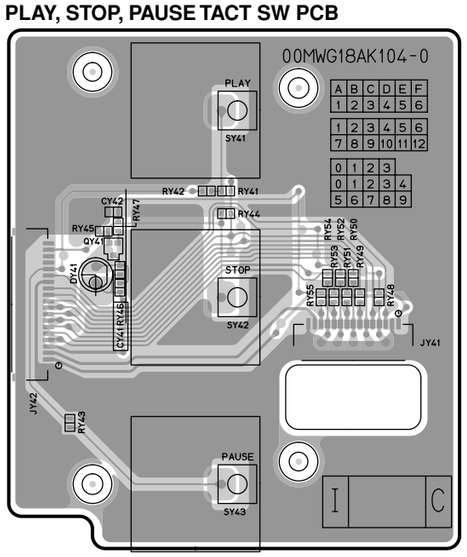

5103 00MWG18AK103-
OPEN/CLOSE, NEXT, PREV TACT SW PCB

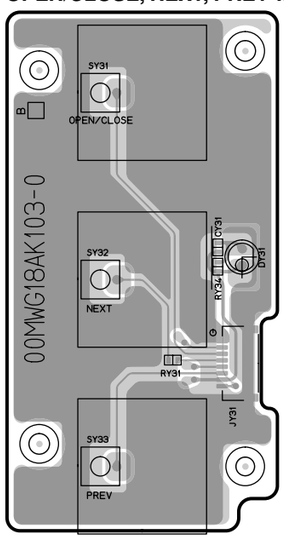

5105 00MWG18AK105-
FRONT DISPLAY LED PCB

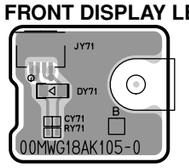

鉛フリー半田

半田付けには、鉛フリー半田（Sn-Ag-Cu）を使用してください。

Lead-free Solder

When soldering, use the Lead-free Solder (Sn-Ag-Cu).

5201 00MWG18AK201-
POWER SUPPLY PCB

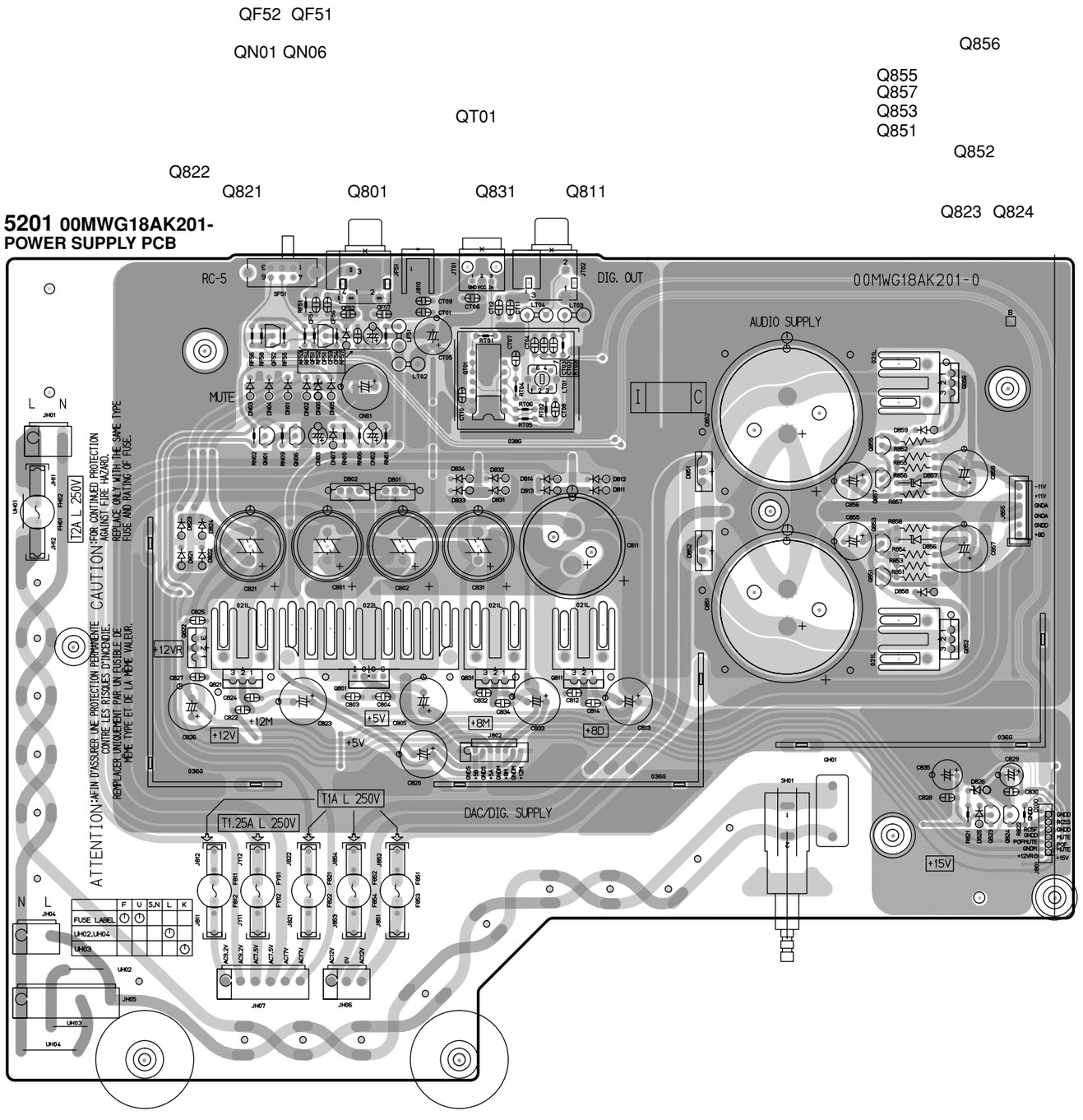

鉛フリー半田

半田付けには、鉛フリー半田（Sn-Ag-Cu）を使用してください。

Lead-free Solder

When soldering, use the Lead-free Solder (Sn-Ag-Cu).

11. IC DATA

5101 / Q101: FPGA XC2S15

Pin no	Signal Name	Function	Pin Usage	Pin Name
1	GND	GND		GND
2	TMS	JTAG terminal		TMS
3	MODE	Mode SW for SACD or CD input	IOB	
4	IO_VREF_7	NC	IOB	IO_VREF_7
5	DALR	Word CLK for CD input	IOB	
6	UNUSED	NC	IOB	
7	DARD	SACD Rch DATA input	IOB	
8	IO_VREF_7	NC	IOB	IO_VREF_7
9	DAPC	DAPC input(SACD : Lch data, CD : PCM data)	IOB	
10	IO_IRDY	NC	PCIIOB	IO_IRDY
11	GND	GND		GND
12	VCCO	3.3v Power supply pins for output drivers (subject to banking rules)		VCCO
13	DSDO	DSDO 8bit serial data signal	IOB	IO_TRDY
14	VCCINT	2.5v Power supply pins for the internal core logic.		VCCINT
15	DSCS3	DSDO data Chip serect signal	IOB	
16	DSCK	DSDO data clock signal	IOB	IO_VREF_6
17	DSRST1	RESET3 for timing(DIVIDER and DSP,DAC)	IOB	
18	SACLO	SACLO(SACD data CLock output)	IOB	
19	UNUSED	NC	IOB	
20	SARO	SARO(SACD Rch data output)	IOB	IO_VREF_6
21	UNUSED	NC	IOB	
22	SALO	SALO(SACD Lch data output)	IOB	
23	M1	GND(Mode pins are used to specify the configuration mode.)		M1
24	GND	GND		GND
25	M0	GND(Mode pins are used to specify the configuration mode.)		M0
26	VCCO	3.3v Power supply pins for output drivers (subject to banking rules)		VCCO
27	M2	GND(Mode pins are used to specify the configuration mode.)		M2
28	nc	NC		
29	nc	NC		
30	DACLO	DACLO(PCM data Clock output)	IOB	IO_VREF_5
31	UNUSED	NC	IOB	
32	DALRO	DALRO(PCM data word Clock output)	IOB	
33	VCCINT	2.5v Power supply pins for the internal core logic.		VCCINT
34	DAPCO	DAPCO(PCM data output)	IOB	IO_VREF_5
35	VCCINT	2.5v Power supply pins for the internal core logic.		VCCINT
36	LATCH	DSDO 8bit data Latch signal input	GCLKIOB	GCK1
37	VCCO	3.3v Power supply pins for output drivers (subject to banking rules)		VCCO
38	GND	GND		GND
39	GCK0	NC	GCLKIOB	GCK0
40	x_in	Crystal resonator input	IOB	
41	osc_out	Crystal resonator Buffer output	IOB	IO_VREF_4
42	VCCINT	2.5v Power supply pins for the internal core logic.		VCCINT
43	x_out	Crystal resonator output	IOB	
44	UNUSED	NC	IOB	
45	IMD1	output A	IOB	IO_VREF_4
46	UNUSED	NC	IOB	
47	IMD0	output B	IOB	
48	GND	GND		GND
49	DONE	Connect to ROM(XCF01S)10pin 330 ohm pullup		DONE
50	VCCO	3.3v Power supply pins for output drivers (subject to banking rules)		VCCO
51	PROGRAM	Connect to ROM(XCF01S)7pin 10K ohm pullup		PROGRAM
52	IO_INIT	Connect to ROM(XCF01S)8pin 3.3K ohm pullup	IOB	IO_INIT
53	DSP_RST	Reset for DSP56364	IOB	IO_D7
54	N_SH	for DSP56364 of Noise shaper on/off	IOB	IO_VREF_3
55	UNUSED	NC	IOB	
56	DC_F	for DSP56364 of DC-Filter on/off	IOB	IO_D6
57	Filter3	for DSP56364 of filter2 control. (differs from a terminal name.)	IOB	IO_D5
58	UNUSED	NC	IOB	
59	Filter2	for DSP56364 of filter3 control. (differs from a terminal name.)	IOB	IO_VREF_3
60	Filter1	for DSP56364 of filter1 control. (differs from a terminal name.)	IOB	IO_D4
61	VCCINT	2.5v Power supply pins for the internal core logic.		VCCINT
62	IO_TRDY	NC	PCIIOB	IO_TRDY
63	VCCO	3.3v Power supply pins for output drivers (subject to banking rules)		VCCO
64	GND	GND		GND
65	IO_IRDY	NC	PCIIOB	IO_IRDY
66	IO_D3	NC	IOB	IO_D3
67	512F	512fs output	IOB	IO_VREF_2
68	UNUSED	NC	IOB	
69	384F	384 output	IOB	IO_D2
70	IO_D1	NC	IOB	IO_D1
71	768F	768fs output	IOB	
72	IO_VREF_2	NC	IOB	IO_VREF_2
73	DOXCF	Connect to ROM(XCF01S)1pin	IOB	IO_DIN_D0

Pin No	Signal Name	Function	Pin Usage	Pin Name
74	IO_DOUT_BUSY	NC	IOB	IO_DOUT_BUSY
75	CCLK	Connect to ROM(XCF01S)2pin		CCLK
76	VCCO	3.3v Power supply pins for output drivers (subject to banking rules)		VCCO
77	TDO	JTAG terminal		TDO
78	GND	GND		GND
79	TDI	JTAG terminal		TDI
80	IO_CS	NC	IOB	IO_CS
81	IO_WRITE	NC	IOB	IO_WRITE
82	192FS	192fsÀbutput for DSP56364 and SM5866AS	IOB	IO_VREF_1
83	UNUSED	NC	IOB	
84	UNUSED	NC	IOB	
85	VCCINT	2.5v Power supply pins for the internal core logic.		VCCINT
86	8FS	8fsÀbutput for DSP56364 and SM5866AS	IOB	IO_VREF_1
87	UNUSED	NC	IOB	
88	DACL	SACD or CD bit clock input	GCLKIOB	GCK2
89	GND	GND		GND
90	VCCO	3.3v Power supply pins for output drivers (subject to banking rules)		VCCO
91	D_CLK	Input Frequency divider.	GCLKIOB	GCK3
92	VCCINT	2.5v Power supply pins for the internal core logic.		VCCINT
93	SYSO	System clock for DAC	IOB	IO_VREF_0
94	VCCINT	2.5v Power supply pins for the internal core logic.		VCCINT
95	latout	DSDO 8bit data Latch signal outPUT	IOB	
96	UNUSED	NC	IOB	
97	timo<0>	reset3 delayed 1(1time of fs)	IOB	IO_VREF_0
98	DACR	reset3 delayed 20msec FOR DSP and DAC	IOB	
99	TCK	JTAG terminal		TCK
100	VCCO	3.3v Power supply pins for output drivers (subject to banking rules)		VCCO

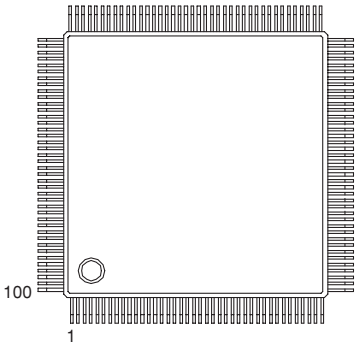

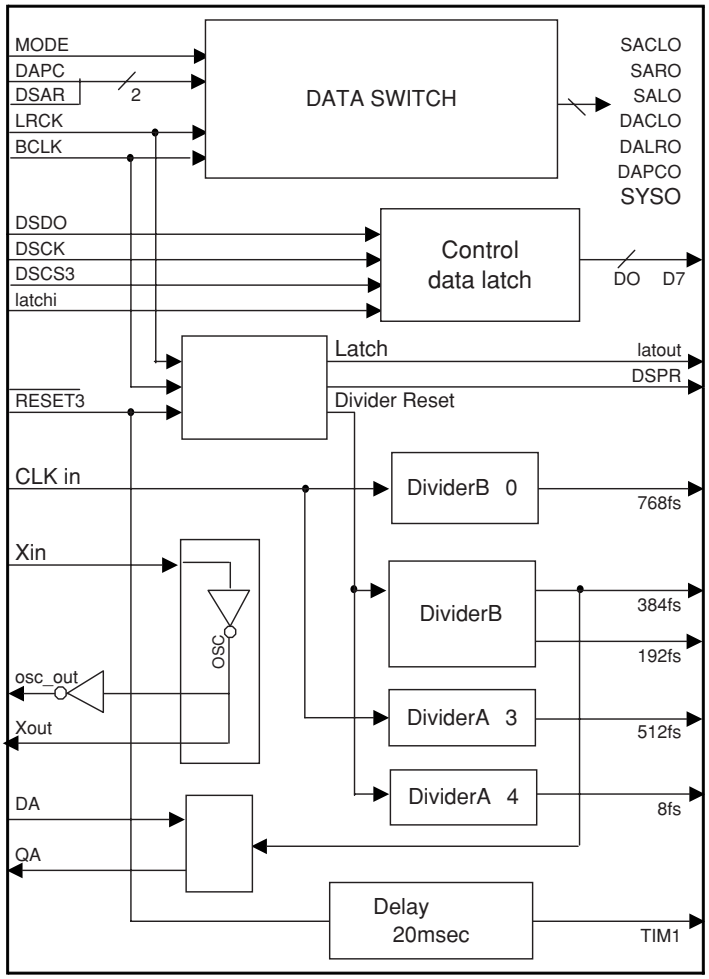

Pin Configurations

Pin Name	Function
A0 - A16	Addresses
$\overline{CE}$	Chip Enable
$\overline{OE}$	Output Enable
$\overline{WE}$	Write Enable
$\overline{RESET}$	RESET
I/O0 - I/O7	Data Inputs/Outputs
NC	No Connect

VSOP Top View (8 x 14 mm) or TSOP Top View (8 x 20 mm) Type 1

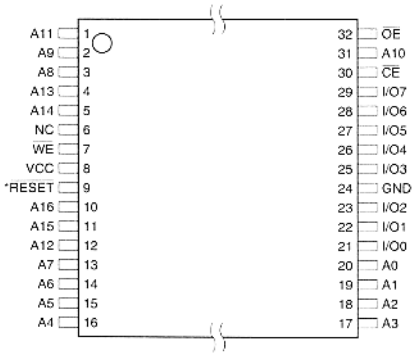

Block Diagram

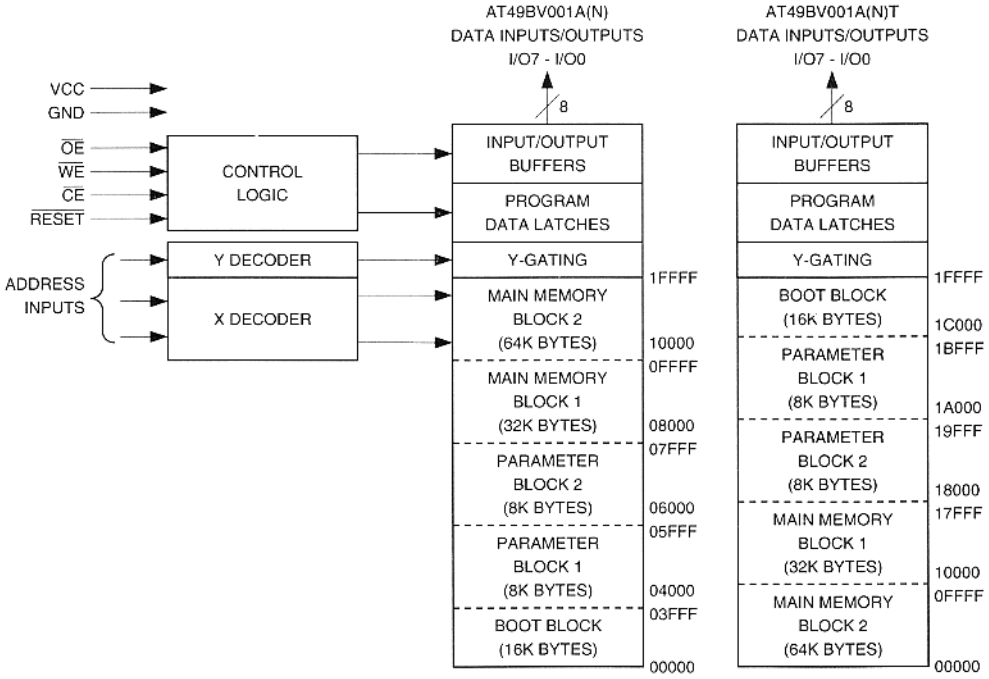

5101 / Q106: DSP56364UM

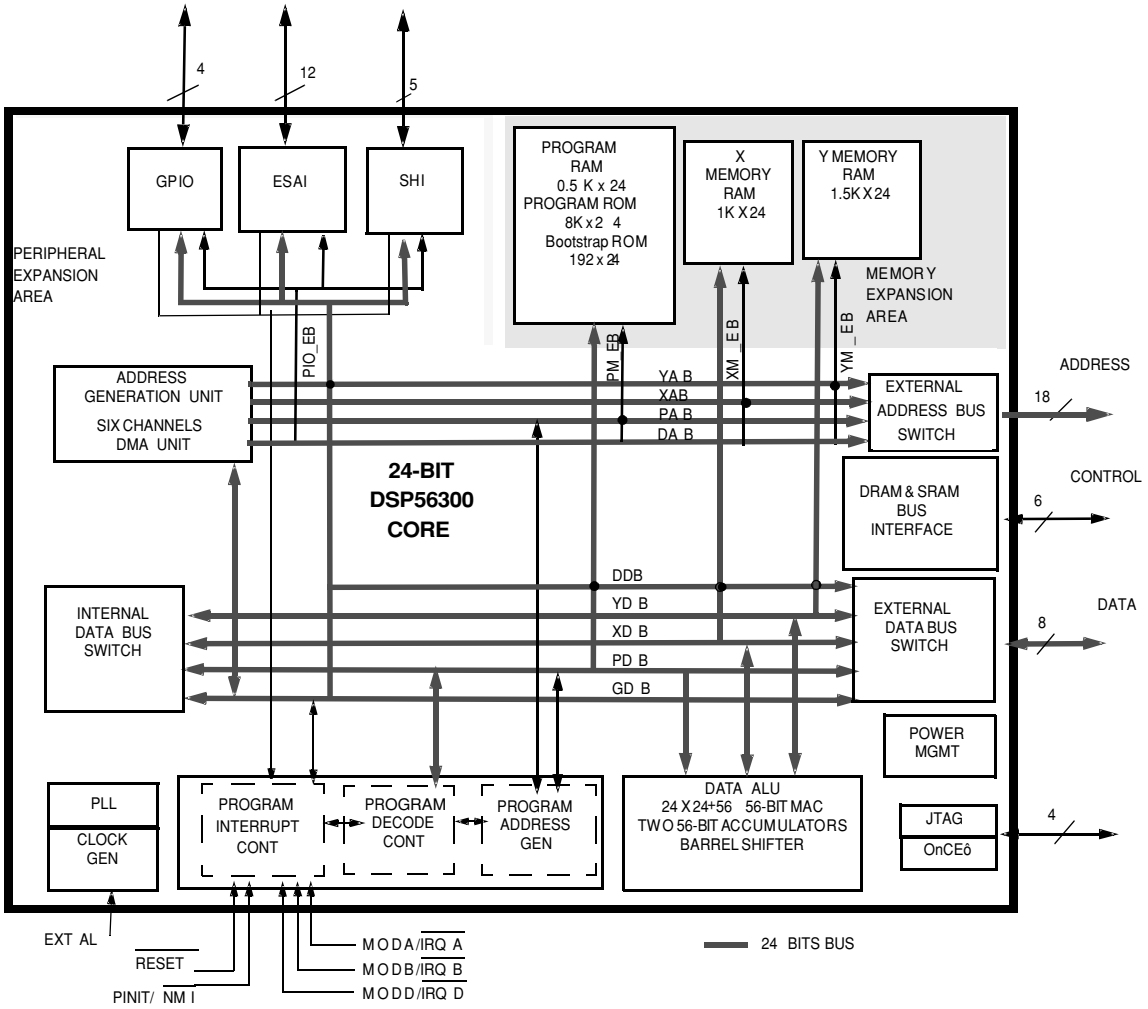

5101 / Q109: NJM2880

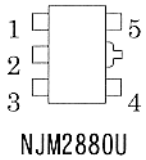

1. CONTROL (ACTIVE HIGH)
2. GND
3. NOISE BYPASS
4. V_{OUT}
5. V_{IN}

5101 / Q211: 2SK389FM

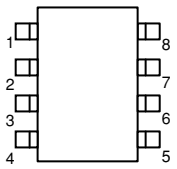

1. NC
2. DRAIN 2
3. GATE 2
4. SOURCE 2
5. SOURCE 1
6. GATE 1
7. DRAIN 1
8. SUBSTRAIGHT
   (SUBSTRAIGHT: OPEN)

5101 / Q293 NJM2887

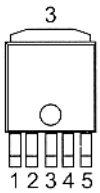

NJM2887DL2

1. CONTROL
2. V_{IN}
3. GND
4. V_{OUT}
5. V_{ADJ}

5101 / Q107 XCF01F

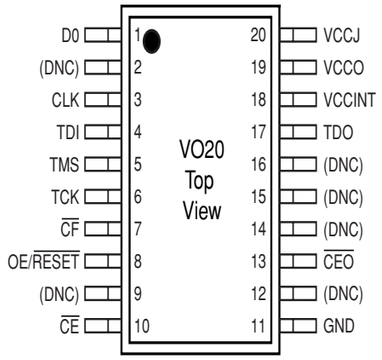

Pin Name	Boundary Scan Order	Boundary Scan Function	Pin Description	20-pin TSSOP (VO20)
TCK		Clock	JTAG Clock Input. This pin is the JTAG test clock. It sequences the TAP controller and all the JTAG test and programming electronics.	6
TDI		Data In	JTAG Serial Data Input. This pin is the serial input to all JTAG instruction and data registers. TDI has an internal 50K resistive pull-up to V_{CCJ} to provide a logic "1" to the device if the pin is not driven.	4
TDO		Data Out	JTAG Serial Data Output. This pin is the serial output for all JTAG instruction and data registers. TDO has an internal 50K resistive pull-up to V_{CCJ} to provide a logic "1" to the system if the pin is not driven.	17
VCCINT			+3.3V Supply. Positive 3.3V supply voltage for internal logic.	18
VCCO			+3.3V, 2.5V, or 1.8V I/O Supply. Positive 3.3V, 2.5V, or 1.8V supply voltage connected to the output voltage drivers and input buffers.	19
VCCJ			+3.3V, 2.5V, or 1.8V JTAG I/O Supply. Positive 3.3V, 2.5V, or 1.8V supply voltage connected to the TDO output voltage driver and TCK, TMS, and TDI input buffers.	20
GND			Ground	11
DNC			Do not connect. (These pins must be left unconnected.)	2, 9, 12, 14, 15, 16

5101 / Q201 SM5866

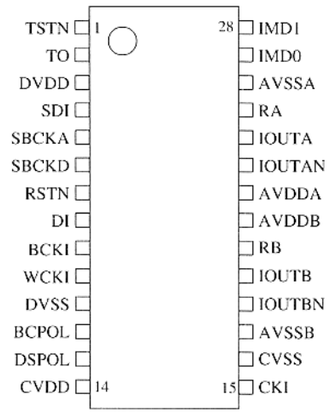

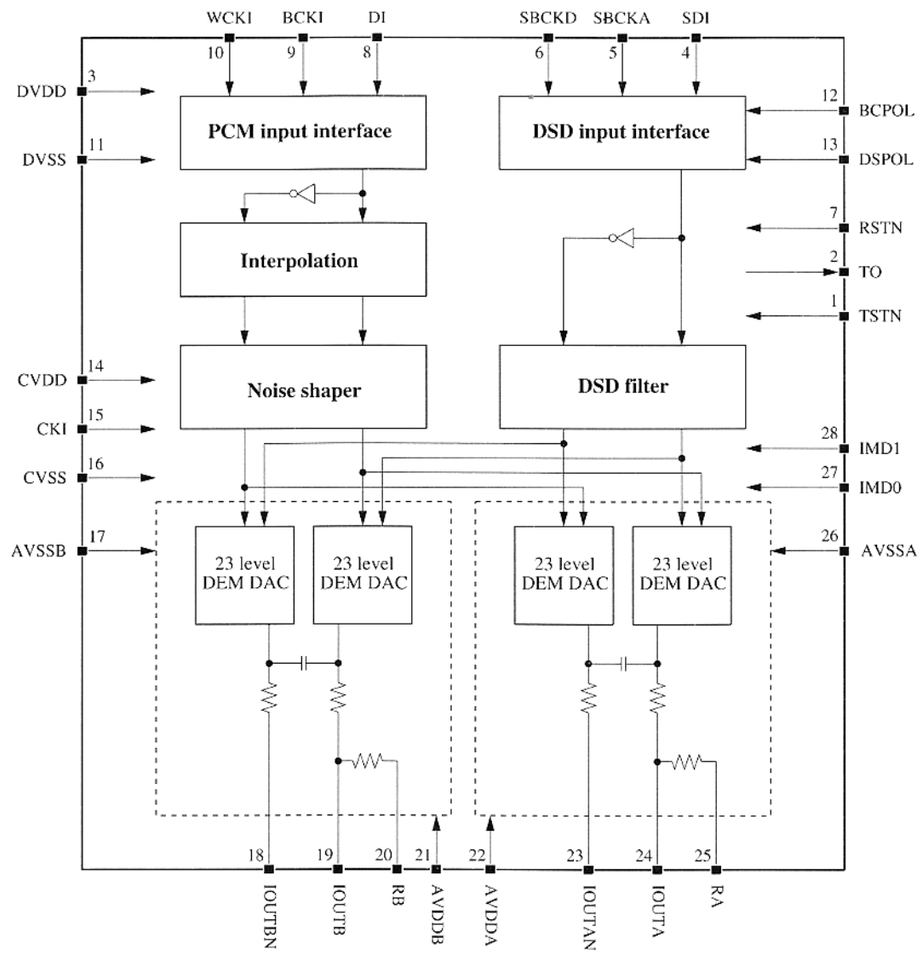

12. EXPLODED VIEW AND PARTS LIST

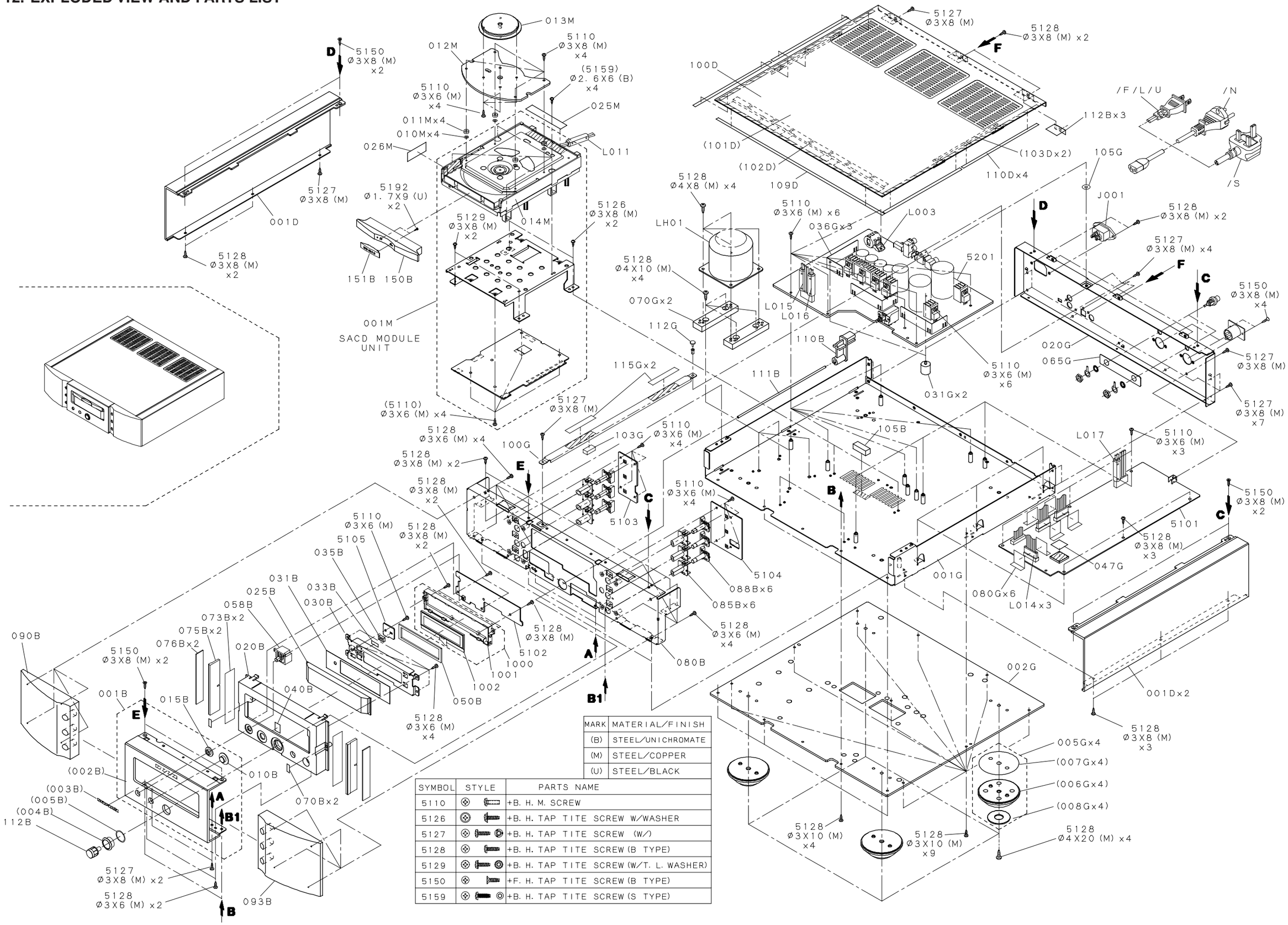

MARK	MATERIAL/FINISH
(B)	STEEL/UNICHROMATE
(M)	STEEL/COPPER
(U)	STEEL/BLACK

SYMBOL	STYLE	PARTS NAME
5110		+B. H. M. SCREW
5126		+B. H. TAP TITE SCREW W/WASHER
5127		+B. H. TAP TITE SCREW (W/)
5128		+B. H. TAP TITE SCREW (B TYPE)
5129		+B. H. TAP TITE SCREW (W/T. L. WASHER)
5150		+F. H. TAP TITE SCREW (B TYPE)
5159		+B. H. TAP TITE SCREW (S TYPE)

P.C.B. NAME	POS. NO.	VERS. COLOR	PART NO. (FOR EUR)	PART NO. (MJI)	PART NAME	DESCRIPTION
	001B	/F1N	nsp	00M18AK248510	FRONT PANEL	FRONT PANEL AL ASM GL
	001B	/L1G	nsp	00M18AK248510	FRONT PANEL	FRONT PANEL AL ASM GL
	001B	/N1G	00M18AK248510	00M18AK248510	FRONT PANEL	FRONT PANEL AL ASM GL
	001B	/N1S	00M18AK248520	00M18AK248520	FRONT PANEL	FRONT PANEL AL ASM SL
	001B	/S1G	nsp	00M18AK248510	FRONT PANEL	FRONT PANEL AL ASM GL
	001B	/U1G	nsp	00M18AK248510	FRONT PANEL	FRONT PANEL AL ASM GL
	010B		00M256J355030	00M256J355030	LENS	IR LENS (GOLD)
	015B	/F1N	nsp	00M18AK259110	BUSHING	BUSH SOUND GL
	015B	/L1G	nsp	00M18AK259110	BUSHING	BUSH SOUND GL
	015B	/N1G	00M18AK259110	00M18AK259110	BUSHING	BUSH SOUND GL
	015B	/N1S	00M18AK259120	00M18AK259120	BUSHING	BUSH SOUND SL
	015B	/S1G	nsp	00M18AK259110	BUSHING	BUSH SOUND GL
	015B	/U1G	nsp	00M18AK259110	BUSHING	BUSH SOUND GL
	020B	/F1N	nsp	00M18AK105130	CHASSIS	CHASSIS FRONT MOLD GL
	020B	/L1G	nsp	00M18AK105130	CHASSIS	CHASSIS FRONT MOLD GL
	020B	/N1G	00M18AK105130	00M18AK105130	CHASSIS	CHASSIS FRONT MOLD GL
	020B	/N1S	00M18AK105230	00M18AK105230	CHASSIS	CHASSIS FRONT MOLD SL
	020B	/S1G	nsp	00M18AK105130	CHASSIS	CHASSIS FRONT MOLD GL
	020B	/U1G	nsp	00M18AK105130	CHASSIS	CHASSIS FRONT MOLD GL
	025B	/F1N	nsp	00M18AK158110	WINDOW	WINDOW
	025B	/L1G	nsp	00M18AK158110	WINDOW	WINDOW
	025B	/N1G	00M18AK158110	00M18AK158110	WINDOW	WINDOW
	025B	/N1S	00M18AK158010	00M18AK158010	WINDOW	WINDOW SILVER
	025B	/S1G	nsp	00M18AK158110	WINDOW	WINDOW
	025B	/U1G	nsp	00M18AK158110	WINDOW	WINDOW
	058B	/F1N	nsp	00M18AK270120	BUTTON	BUTTON SOUND GL
	058B	/L1G	nsp	00M18AK270120	BUTTON	BUTTON SOUND GL
	058B	/N1G	00M18AK270120	00M18AK270120	BUTTON	BUTTON SOUND GL
	058B	/N1S	00M18AK270220	00M18AK270220	BUTTON	BUTTON SOUND SL
	058B	/S1G	nsp	00M18AK270120	BUTTON	BUTTON SOUND GL
	058B	/U1G	nsp	00M18AK270120	BUTTON	BUTTON SOUND GL
	075B		00M18AK355010	00M18AK355010	LENS	LENS SIDE
	085B	/F1N	nsp	00M04AJ259210	BUSHING	FUNCTION BUTTON BUSH GOLD
	085B	/L1G	nsp	00M04AJ259210	BUSHING	FUNCTION BUTTON BUSH GOLD
	085B	/N1G	00M04AJ259210	00M04AJ259210	BUSHING	FUNCTION BUTTON BUSH GOLD
	085B	/N1S	00M04AJ259110	00M04AJ259110	BUSHING	FUNCTION BUTTON BUSH SILVER
	085B	/S1G	nsp	00M04AJ259210	BUSHING	FUNCTION BUTTON BUSH GOLD
	085B	/U1G	nsp	00M04AJ259210	BUSHING	FUNCTION BUTTON BUSH GOLD
	088B	/F1N	nsp	00M04AJ270130	BUTTON	FUNCTION BUTTON (GL)
	088B	/L1G	nsp	00M04AJ270130	BUTTON	FUNCTION BUTTON (GL)
	088B	/N1G	00M04AJ270130	00M04AJ270130	BUTTON	FUNCTION BUTTON (GL)
	088B	/N1S	00M04AJ270230	00M04AJ270230	BUTTON	FUNCTION BUTTON (SI)
	088B	/S1G	nsp	00M04AJ270130	BUTTON	FUNCTION BUTTON (GL)
	088B	/U1G	nsp	00M04AJ270130	BUTTON	FUNCTION BUTTON (GL)
	090B	/F1N	nsp	00M18AK063110	ESCUTCHEON	ESCUTCHEON (L) AL GL
	090B	/L1G	nsp	00M18AK063110	ESCUTCHEON	ESCUTCHEON (L) AL GL
	090B	/N1G	00M18AK063110	00M18AK063110	ESCUTCHEON	ESCUTCHEON (L) AL GL
	090B	/N1S	00M18AK063210	00M18AK063210	ESCUTCHEON	ESCUTCHEON (L) AL SL
	090B	/S1G	nsp	00M18AK063110	ESCUTCHEON	ESCUTCHEON (L) AL GL
	090B	/U1G	nsp	00M18AK063110	ESCUTCHEON	ESCUTCHEON (L) AL GL
	093B	/F1N	nsp	00M18AK063120	ESCUTCHEON	ESCUTCHEON (R) AL GL
	093B	/L1G	nsp	00M18AK063120	ESCUTCHEON	ESCUTCHEON (R) AL GL
	093B	/N1G	00M18AK063120	00M18AK063120	ESCUTCHEON	ESCUTCHEON (R) AL GL
	093B	/N1S	00M18AK063220	00M18AK063220	ESCUTCHEON	ESCUTCHEON (R) AL SL
	093B	/S1G	nsp	00M18AK063120	ESCUTCHEON	ESCUTCHEON (R) AL GL
	093B	/U1G	nsp	00M18AK063120	ESCUTCHEON	ESCUTCHEON (R) AL GL
	110B		00M18AK121010	00M18AK121010	LINK	LINK POWER
	111B		00M18AK112010	00M18AK112010	SHAFT	SHAFT POWER
	112B	/F1N	nsp	00M18AK270110	BUTTON	BUTTON POWER GL
	112B	/L1G	nsp	00M18AK270110	BUTTON	BUTTON POWER GL
	112B	/N1G	00M18AK270110	00M18AK270110	BUTTON	BUTTON POWER GL
	112B	/N1S	00M18AK270210	00M18AK270210	BUTTON	BUTTON POWER SL
	112B	/S1G	nsp	00M18AK270110	BUTTON	BUTTON POWER GL
	112B	/U1G	nsp	00M18AK270110	BUTTON	BUTTON POWER GL
	150B	/F1N	nsp	00M18AK063130	ESCUTCHEON	ESCUTCHEON TRAY GL
	150B	/L1G	nsp	00M18AK063130	ESCUTCHEON	ESCUTCHEON TRAY GL
	150B	/N1G	00M18AK063130	00M18AK063130	ESCUTCHEON	ESCUTCHEON TRAY GL
	150B	/N1S	00M18AK063230	00M18AK063230	ESCUTCHEON	ESCUTCHEON TRAY SL

NOTE : “nsp” PARTS IS LISTED FOR REFERENCE ONLY, MARANTZ WILL NOT SUPPLY THESE PARTS.

P.C.B. NAME	POS. NO.	VERS. COLOR	PART NO. (FOR EUR)	PART NO. (MJI)	PART NAME	DESCRIPTION
	150B	/S1G	nsp	00M18AK063130	ESCUTCHEON	ESCUTCHEON TRAY GL
	150B	/U1G	nsp	00M18AK063130	ESCUTCHEON	ESCUTCHEON TRAY GL
	151B	/F1N	nsp	00M392K063160	ESCUTCHEON	ESCUTCHEON
	151B	/L1G	nsp	00M392K063160	ESCUTCHEON	ESCUTCHEON
	151B	/N1G	00M392K063160	00M392K063160	ESCUTCHEON	ESCUTCHEON
	151B	/N1S	00M392K063260	00M392K063260	ESCUTCHEON	ESCUTCHEON TRAY FRONT SIL
	151B	/S1G	nsp	00M392K063160	ESCUTCHEON	ESCUTCHEON
	151B	/U1G	nsp	00M392K063160	ESCUTCHEON	ESCUTCHEON
	001D	/F1N	nsp	00M18AK249110	SIDE PANEL	SIDE PANEL AL GL
	001D	/L1G	nsp	00M18AK249110	SIDE PANEL	SIDE PANEL AL GL
	001D	/N1G	00M18AK249110	00M18AK249110	SIDE PANEL	SIDE PANEL AL GL
	001D	/N1S	00M18AK249210	00M18AK249210	SIDE PANEL	SIDE PANEL AL SL
	001D	/S1G	nsp	00M18AK249110	SIDE PANEL	SIDE PANEL AL GL
	001D	/U1G	nsp	00M18AK249110	SIDE PANEL	SIDE PANEL AL GL
	100D	/F1N	nsp	00M18AK257520	LID	TOP COVER ASM GL
	100D	/L1G	nsp	00M18AK257520	LID	TOP COVER ASM GL
	100D	/N1G	00M18AK257520	00M18AK257520	LID	TOP COVER ASM GL
	100D	/N1S	00M18AK257530	00M18AK257530	LID	TOP COVER ASM SL
	100D	/S1G	nsp	00M18AK257520	LID	TOP COVER ASM GL
	100D	/U1G	nsp	00M18AK257520	LID	TOP COVER ASM GL
	005G	/L1G	nsp	00M04AJ057510	LEG	LEGS (GOLD)
	005G	/N1G	00M04AJ057510	00M04AJ057510	LEG	LEGS (GOLD)
	005G	/N1S	00M04AJ057520	00M04AJ057520	LEG	LEGS (SIVER)
	005G	/S1G	nsp	00M04AJ057510	LEG	LEGS (GOLD)
	005G	/U1G	nsp	00M04AJ057510	LEG	LEGS (GOLD)
	001M		nsp	nsp	MECHANISM	SUPER AUDIO CD MECHA UNIT
	012M		00M18AK053010	00M18AK053010	COVER	COVER LOADER PL
	013M		00M18AK053020	00M18AK053020	COVER	COVER LOADER
	014M		00M21AK304020	00M21AK304020	MECHANISM	MECHA LOADER AND MECHA TRAVERSE
			nsp	nsp	PCB ASSY	SUPER AUDIO CD MODULE UNIT
	1000		00M18AK271520	00M18AK271520	HOLDER	LCD UNIT KIT
	1002		00MHQ21202990	00MHQ21202990	DISPLAY	LCD WSTN NEGATIVE96X35 TRULY
	▲ J001		00MYJ04002550	00MYJ04002550	JACK	!AC INLET TYPE HF-301
	J402		00MYT02010740	00MYT02010740	TERMINAL	1P CINCH JACK
	J403		00MYP10002780	00MYP10002780	PLUG	XLR OUTPUT(GOLD PIN WITH GND)
	J452		00MYT02010740	00MYT02010740	TERMINAL	1P CINCH JACK
	J453		00MYP10002780	00MYP10002780	PLUG	XLR OUTPUT(GOLD PIN WITH GND)
	L003		00MFC50230010	00MFC50230010	FERRITE CORE	TFCK-23-11-14
	L011		00MFC50270040	00MFC50270040	FERRITE CORE	USB-4 SLEEVE FERRITE CLAMP
	L012		00MFC90280010	00MFC90280010	FERRITE CORE	HF70SH28*2*10 FPC FERRITE CORE
	L013		00MFC90280010	00MFC90280010	FERRITE CORE	HF70SH28*2*10 FPC FERRITE CORE
	L014		00MFC90280010	00MFC90280010	FERRITE CORE	HF70SH28*2*10 FPC FERRITE CORE
	L015		00MFC50270040	00MFC50270040	FERRITE CORE	USB-4 SLEEVE FERRITE CLAMP
	L016		00MFC50270040	00MFC50270040	FERRITE CORE	USB-4 SLEEVE FERRITE CLAMP
	L017		00MFC50270040	00MFC50270040	FERRITE CORE	USB-4 SLEEVE FERRITE CLAMP
	▲ LH01	/F1N	nsp	00MTS46010100	TRANSF.	# MAIN TRANSF. 100V 50/60HZ
	▲ LH01	/L1G	nsp	00MTS46010130	TRANSF.	# MAIN TRANSF. 110/220V 50/60HZ
	▲ LH01	/N1G	00MTS46010120	00MTS46010120	TRANSF.	# MAIN TRANSF. 230V 50/60HZ
	▲ LH01	/N1S	00MTS46010120	00MTS46010120	TRANSF.	# MAIN TRANSF. 230V 50/60HZ
	▲ LH01	/S1G	nsp	00MTS46010120	TRANSF.	# MAIN TRANSF. 230V 50/60HZ
	▲ LH01	/U1G	nsp	00MTS46010110	TRANSF.	# MAIN TRANSF. 120V 60HZ
	W101		nsp	00MYU25080520	FPC	FFC 1.0MM N=25 L=80
	W102		nsp	00MYU25080520	FPC	FFC 1.0MM N=25 L=80
	W103		nsp	00MYU15100520	FPC	SMCD-15X100-BDX6-P1.0-S4
	W801		nsp	00MYU13060520	FPC	SMCD-13X60-BDX6-P1.0 UL2896
	WY01		nsp	00MYU20060520	FPC	SMCD-20X60-BDX6(BL)-P1.0-S4.0
	WY02		nsp	00MYU04060520	FPC	2MCD-04X60-BDX6(BL)-P1.0-S4.0
	WY03		nsp	00MYU08060520	FPC	SMCD-8X60.0-BDX6-P1.0-S4

NOTE : “nsp” PARTS IS LISTED FOR REFERENCE ONLY, MARANTZ WILL NOT SUPPLY THESE PARTS.

P.C.B. NAME	POS. NO.	VERS. COLOR	PART NO. (FOR EUR)	PART NO. (MJI)	PART NAME	DESCRIPTION
PACKING						
	005T	/F1N	nsp	00M18AK851110	USER GUIDE	USER GUIDE SA-11S1 (F)
	005T	/L1G	nsp	00M18AK851350	USER GUIDE	USER GUIDE SA-11S1 (S)
	005T	/N1G	00M18AK851310	00M18AK851310	USER GUIDE	USER GUIDE SA-11S1 (N)
	005T	/N1S	00M18AK851310	00M18AK851310	USER GUIDE	USER GUIDE SA-11S1 (N)
	005T	/S1G	nsp	00M18AK851350	USER GUIDE	USER GUIDE SA-11S1 (S)
	005T	/U1G	nsp	00M18AK851250	USER GUIDE	USER GUIDE SA-11S1 (U)
	T100		00MZK18AK0010	00MZK18AK0010	UNIT KIT	REMOTE CONTROLLER RC-11SAS1
	▲ W001	/F1N	nsp	00MZC02001210	MAINS CORD	# MAINS CORD FOR F 125V 15A
	▲ W001	/L1G	nsp	00MZC01807030	MAINS CORD	# MAINS CORD TAIWAN 10A 125V
	▲ W001	/N1G	00MZC01803080	00MZC01803080	MAINS CORD	# 2P MAINS CORD 10A 250V CLASS2
	▲ W001	/N1S	00MZC01803080	00MZC01803080	MAINS CORD	# 2P MAINS CORD 10A 250V CLASS2
	▲ W001	/S1G	nsp	00MZC01804100	MAINS CORD	# MAINS CORD AC 250V 10A FOR UK
	▲ W001	/U1G	nsp	00MZC01803100	MAINS CORD	# MAINS CORD UL/CSA 10A 125V
NOT STANDARD SPARE PART						
	005S		nsp	00M18AK809010	CUSHION	CUSHION FOR SET
	010S		nsp	00M18AK801010	PACKING CASE	PACKING CASE
	020S	/N1G	nsp	00M18AK805010	MASS CARTON	MASTER CARTON
	020S	/N1S	nsp	00M18AK805010	MASS CARTON	MASTER CARTON
	J051		nsp	00MZD00900100	CONNECTIVE CORD	RCA RC-5 CORD 0.9M
	J082		nsp	00MZD01100010	CONNECTIVE CORD	RCA CONNECTIVE CORD (GOLD)

NOTE : “nsp” PARTS IS LISTED FOR REFERENCE ONLY, MARANTZ WILL NOT SUPPLY THESE PARTS.

13. ELECTRICAL PARTS LIST

PARTS INFORMATION

RESISTORS

1) 00MGD05×××140, Carbon film fixed resistor, ±5% 1/4W
2) 00MGD05×××160, Carbon film fixed resistor, ±5% 1/6W

① —— Resistance value

Examples ;

① Resistance value

0.1 Ω 001	10 Ω 100	1 kΩ 102	100 kΩ 104
0.5 Ω 005	18 Ω 180	2.7 kΩ 272	680 kΩ 684
1 Ω 010	100 Ω 101	10 kΩ 103	1 MΩ 105
6.8 Ω 068	390 Ω 391	22 kΩ 223	4.7 MΩ 475

Note : Please distinguish 1/4W from 1/6W by the shape of parts used actually.

CAPACITORS

CERAMIC CAP.

3) 00MDD1××××370 — Ceramic capacitor, Disc type, Temp.coeff.P350 ～N1000, 50V

② ③
③ — Capacity value
② — Tolerance

Examples ;

② Tolerance (Capacity deviation)

±0.25 pF 0
±0.5 pF 1
±5% 5

＊ Tolerance of COMMON PARTS handled here are as follows :

0.5 pF ～ 5 pF .... ±0.25 pF
6 pF ～ 10 pF .... ±0.5 pF
12 pF ～ 560 pF .... ±5%

③ Capacity value

0.5 pF 005	3 pF 030	100 pF 101
1 pF 010	10 pF 100	220 pF 221
1.5 pF 015	47 pF 470	560 pF 561

CERAMIC CAP.

4) 00MDK16×××300, — High dielectric constant ceramic capacitor, Disc type, Temp.chara. 2B4, 50V

④ — Capacity value

Examples ;

④ Capacity value

100 pF 101	1000 pF 102	10000 pF 103
470 pF 471	2200 pF 222	

ELECTROLY CAP. (⧣)

5) 00MEA×××××× 10, — Electrolytic capacitor, One-way lead type, Tolerance ±20%

⑤ ⑥
⑥ — Working voltage
⑤ — Capacity value

Examples ;

⑤ Capacity value

0.1 μF 104	4.7 μF 475	100 μF 107
0.33 μF 334	10 μF 106	330 μF 337
1 μF 105	22 μF 226	1100 μF 118
		2200 μF 228

⑥ Working voltage

6.3V 006	25V 025
10V 010	35V 035
16V 016	50V 050

FILM CAP. (⧦)

6) 00MDF15×××350 → Plastic film capacitor
00MDF15×××310 → One-way type, Mylar ±5% 50V
00MDF16×××310 → Plastic film capacitor, One-way type, Mylar ±10% 50V

⑦ — Capacity value

Examples ;

⑦ Capacity value

0.001 μF (1000 pF) 102	0.1 μF 104
0.0018 μF 182	0.56 μF 564
0.01 μF 103	1 μF 105
0.015 μF 153	

NOTE ON SAFETY FOR FUSIBLE RESISTOR :

The suppliers and their type numbers of fusible resistors are as follows;

1. KOA Corporation

Part No. (MJI)	Type No. (KOA)	Description
00MNH05 ×××140	→ RF25S ××××ΩJ	(±5% 1/4W)
00MNH05 ×××120	→ RF50S ××××ΩJ	(±5% 1/2W)
00MNH85 ×××110	→ RF73B2A ××××ΩJ	(±5% 1/10W)
00MNH95 ×××140	→ RF73B2E ××××ΩJ	(±5% 1/4W)

＊ Resistance value — Resistance value (0.1 Ω – 10 kΩ)

2. Matsushita Electronic Components Co., Ltd

Part No. (MJI)	Type No. (MEC)	Description
00MNF05 ×××140	→ ERD-2FCJ ×××	(±5% 1/4W)
00MRF05 ×××140		
00MNF02 ×××140	→ ERD-2FCG ×××	(±2% 1/4W)
00MRF02 ×××140		

＊Resistance value — ＊Resistance value

Examples ;

＊ Resistance value

0.1 Ω 001	10 Ω 100	1 kΩ 102	100 kΩ 104
0.5 Ω 005	18 Ω 180	2.7 kΩ 272	680 kΩ 684
1 Ω 010	100 Ω 101	10 kΩ 103	1 MΩ 105
6.8 Ω 068	390 Ω 391	22 kΩ 223	4.7 MΩ 475

ABBREVIATION AND MARKS

ANT.	: ANTENNA	BATT.	: BATTERY
CAP.	: CAPACITOR	CER.	: CERAMIC
CONN.	: CONNECTING	DIG.	: DIGITAL
HP	: HEADPHONE	MIC.	: MICROPHONE
μ-PRO	: MICROPROCESSOR	REC.	: RECORDING
RES.	: RESISTOR	SPK	: SPEAKER
SW	: SWITCH	TRANSF.	: TRANSFORMER
TRIM.	: TRIMMING	TRS.	: TRANSISTOR
VAR.	: VARIABLE	X'TAL	: CRYSTAL

NOTE ON FUSE :

Regarding to all parts of parts code **00MFS20**xxx**2**xx, replace only with Wickmann-Werke GmbH, Type 372 non glass type fuse.

NOTE ON SAFETY :

Symbol ⚠ Fire or electrical shock hazard. Only original parts should be used to replaced any part marked with symbol ⚠ . Any other component substitution (other than original type), may increase risk of fire or electrical shock hazard.

安全上の注意：

⚠がついている部品は、安全上重要な部品です。必ず指定されている部品番号の部品を使用して下さい。

P.C.B. NAME	POS. NO.	VERS. COLOR	PART NO. (FOR EUR)	PART NO. (MJI)	PART NAME	DESCRIPTION
					DSP DAC AUDIO PCB (00MWG18AK100-)	
5101	C105		nsp	00MDK98104200	CERAMIC CAP.	GRM39F104Z16 0.1UF MURATA
5101	C106		nsp	00MDD90010300	CERAMIC CAP.	1 PF +- 0.25 PF CK 50V GR39
5101	C107		nsp	00MDK98104200	CERAMIC CAP.	GRM39F104Z16 0.1UF MURATA
5101	C108		nsp	00MDK98104200	CERAMIC CAP.	GRM39F104Z16 0.1UF MURATA
5101	C109		nsp	00MDK98104200	CERAMIC CAP.	GRM39F104Z16 0.1UF MURATA
5101	C110		nsp	00MDK98104200	CERAMIC CAP.	GRM39F104Z16 0.1UF MURATA
5101	C111		00MEY22600620	00MEY22600620	ELECT. CAP	22UF/6.3V
5101	C112		nsp	00MDK96681300	CERAMIC CAP.	680PF (GR39)
5101	C113		nsp	00MDD91060300	CERAMIC CAP.	6 PF +- 0.5 PF CH 50V GR39
5101	C114		nsp	00MDK98104200	CERAMIC CAP.	GRM39F104Z16 0.1UF MURATA
5101	C115		nsp	00MDK98104200	CERAMIC CAP.	GRM39F104Z16 0.1UF MURATA
5101	C116		nsp	00MDK98104200	CERAMIC CAP.	GRM39F104Z16 0.1UF MURATA
5101	C117		nsp	00MDK98104200	CERAMIC CAP.	GRM39F104Z16 0.1UF MURATA
5101	C118		nsp	00MDK98104200	CERAMIC CAP.	GRM39F104Z16 0.1UF MURATA
5101	C120		nsp	00MDK98104200	CERAMIC CAP.	GRM39F104Z16 0.1UF MURATA
5101	C121		nsp	00MDK98104200	CERAMIC CAP.	GRM39F104Z16 0.1UF MURATA
5101	C122		nsp	00MDK98104200	CERAMIC CAP.	GRM39F104Z16 0.1UF MURATA
5101	C123		nsp	00MDK98104200	CERAMIC CAP.	GRM39F104Z16 0.1UF MURATA
5101	C124		nsp	00MDK98104200	CERAMIC CAP.	GRM39F104Z16 0.1UF MURATA
5101	C125		nsp	00MDK98104200	CERAMIC CAP.	GRM39F104Z16 0.1UF MURATA
5101	C126		nsp	00MDK98104200	CERAMIC CAP.	GRM39F104Z16 0.1UF MURATA
5101	C127		nsp	00MDK98104200	CERAMIC CAP.	GRM39F104Z16 0.1UF MURATA
5101	C128		nsp	00MDK98104200	CERAMIC CAP.	GRM39F104Z16 0.1UF MURATA
5101	C129		00MEY22600620	00MEY22600620	ELECT. CAP	22UF/6.3V
5101	C131		nsp	00MDK98104200	CERAMIC CAP.	GRM39F104Z16 0.1UF MURATA
5101	C132		nsp	00MDK98104200	CERAMIC CAP.	GRM39F104Z16 0.1UF MURATA
5101	C133		nsp	00MDK98104200	CERAMIC CAP.	GRM39F104Z16 0.1UF MURATA
5101	C134		nsp	00MDK96102300	CERAMIC CAP.	1000 PF +- 10 % B 50V GR36
5101	C135		nsp	00MDK96104200	CERAMIC CAP.	0.1 UF +- 10 % B 10V
5101	C136		nsp	00MDK98104200	CERAMIC CAP.	GRM39F104Z16 0.1UF MURATA
5101	C137		00MEY10700620	00MEY10700620	ELECT. CAP	100UF/6.3V
5101	C138		nsp	00MDK98104200	CERAMIC CAP.	GRM39F104Z16 0.1UF MURATA
5101	C139		nsp	00MDK98104200	CERAMIC CAP.	GRM39F104Z16 0.1UF MURATA
5101	C140		nsp	00MDK98104200	CERAMIC CAP.	GRM39F104Z16 0.1UF MURATA
5101	C141		nsp	00MDK98104200	CERAMIC CAP.	GRM39F104Z16 0.1UF MURATA
5101	C142		nsp	00MDK98104200	CERAMIC CAP.	GRM39F104Z16 0.1UF MURATA
5101	C143		nsp	00MDK98104200	CERAMIC CAP.	GRM39F104Z16 0.1UF MURATA
5101	C144		00MEY22600620	00MEY22600620	ELECT. CAP	22UF/6.3V
5101	C145		nsp	00MDK98104200	CERAMIC CAP.	GRM39F104Z16 0.1UF MURATA
5101	C146		nsp	00MDK98104200	CERAMIC CAP.	GRM39F104Z16 0.1UF MURATA
5101	C147		nsp	00MDK98104200	CERAMIC CAP.	GRM39F104Z16 0.1UF MURATA
5101	C148		nsp	00MDK98104200	CERAMIC CAP.	GRM39F104Z16 0.1UF MURATA
5101	C150		nsp	00MDK98104200	CERAMIC CAP.	GRM39F104Z16 0.1UF MURATA
5101	C151		nsp	00MOA47701620	ELECT. CAP.	470UF 16V M RA-2
5101	C152		nsp	00MDK98104200	CERAMIC CAP.	GRM39F104Z16 0.1UF MURATA
5101	C153		00MEY22600620	00MEY22600620	ELECT. CAP	22UF/6.3V
5101	C154		nsp	00MDK98103300	CERAMIC CAP.	0.01UF
5101	C155		00MEY22600620	00MEY22600620	ELECT. CAP	22UF/6.3V
5101	C156		00MEY10700620	00MEY10700620	ELECT. CAP	100UF/6.3V
5101	C157		nsp	00MDK98104200	CERAMIC CAP.	GRM39F104Z16 0.1UF MURATA
5101	C201		nsp	00MOA10701650	ELECT. CAP.	100 UF 16V ARA
5101	C202		nsp	00MDK98104200	CERAMIC CAP.	GRM39F104Z16 0.1UF MURATA
5101	C203		nsp	00MOA10701050	ELECT. CAP.	100UF 10V ARA
5101	C204		nsp	00MDK98104200	CERAMIC CAP.	GRM39F104Z16 0.1UF MURATA
5101	C205		nsp	00MDD95101300	CERAMIC CAP.	100 PF +- 5 % CG 50V GR39
5101	C206		nsp	00MOA10701650	ELECT. CAP.	100 UF 16V ARA
5101	C207		nsp	00MDK98104200	CERAMIC CAP.	GRM39F104Z16 0.1UF MURATA
5101	C208		nsp	00MDK98104200	CERAMIC CAP.	GRM39F104Z16 0.1UF MURATA
5101	C209		nsp	00MOA47702550	ELECT. CAP.	470 UF M 25V ARA
5101	C210		nsp	00MDK96102300	CERAMIC CAP.	1000 PF +- 10 % B 50V GR36
5101	C211		00MDF95331500	00MDF95331500	CHIP MICA	UC342H3300J 330PF 500WV
5101	C212		00MDF95330500	00MDF95330500	CHIP MICA	UC232H0330J 33PF 500WV
5101	C221		nsp	00MOA47701650	ELECT. CAP.	470 UF M 16V ARA
5101	C222		nsp	00MOA47701650	ELECT. CAP.	470 UF M 16V ARA
5101	C226		00MDF95331500	00MDF95331500	CHIP MICA	UC342H3300J 330PF 500WV
5101	C227		00MDF95330500	00MDF95330500	CHIP MICA	UC232H0330J 33PF 500WV

NOTE : “nsp” PARTS IS LISTED FOR REFERENCE ONLY, MARANTZ WILL NOT SUPPLY THESE PARTS.

P.C.B. NAME	POS. NO.	VERS. COLOR	PART NO. (FOR EUR)	PART NO. (MJI)	PART NAME	DESCRIPTION
5101	C251		nsp	00MOA10701650	ELECT. CAP.	100 UF 16V ARA
5101	C252		nsp	00MDK98104200	CERAMIC CAP.	GRM39F104Z16 0.1UF MURATA
5101	C253		nsp	00MOA10701050	ELECT. CAP.	100UF 10V ARA
5101	C254		nsp	00MDK98104200	CERAMIC CAP.	GRM39F104Z16 0.1UF MURATA
5101	C255		nsp	00MDD95101300	CERAMIC CAP.	100 PF +- 5 % CG 50V GR39
5101	C256		nsp	00MOA10701650	ELECT. CAP.	100 UF 16V ARA
5101	C257		nsp	00MDK98104200	CERAMIC CAP.	GRM39F104Z16 0.1UF MURATA
5101	C260		nsp	00MDK96102300	CERAMIC CAP.	1000 PF +- 10 % B 50V GR36
5101	C261		00MDF95331500	00MDF95331500	CHIP MICA	UC342H3300J 330PF 500WV
5101	C262		00MDF95330500	00MDF95330500	CHIP MICA	UC232H0330J 33PF 500WV
5101	C271		nsp	00MOA47701650	ELECT. CAP.	470 UF M 16V ARA
5101	C272		nsp	00MOA47701650	ELECT. CAP.	470 UF M 16V ARA
5101	C276		00MDF95331500	00MDF95331500	CHIP MICA	UC342H3300J 330PF 500WV
5101	C277		00MDF95330500	00MDF95330500	CHIP MICA	UC232H0330J 33PF 500WV
5101	C292		nsp	00MDK98104200	CERAMIC CAP.	GRM39F104Z16 0.1UF MURATA
5101	C293		nsp	00MDK98104200	CERAMIC CAP.	GRM39F104Z16 0.1UF MURATA
5101	C294		nsp	00MOA10702520	ELECT. CAP.	100 UF M 25V RA-2
5101	C295		nsp	00MDK98104200	CERAMIC CAP.	GRM39F104Z16 0.1UF MURATA
5101	C296		nsp	00MDK98104200	CERAMIC CAP.	GRM39F104Z16 0.1UF MURATA
5101	C297		nsp	00MOA10702520	ELECT. CAP.	100 UF M 25V RA-2
5101	C301		00MDF95331500	00MDF95331500	CHIP MICA	UC342H3300J 330PF 500WV
5101	C302		00MDF95151500	00MDF95151500	CHIP MICA	UC342H1500J 150PF 500WV
5101	C303		00MDF95330500	00MDF95330500	CHIP MICA	UC232H0330J 33PF 500WV
5101	C321		nsp	00MOA47701650	ELECT. CAP.	470 UF M 16V ARA
5101	C322		nsp	00MOA47701650	ELECT. CAP.	470 UF M 16V ARA
5101	C326		00MDF95331500	00MDF95331500	CHIP MICA	UC342H3300J 330PF 500WV
5101	C327		00MDF95151500	00MDF95151500	CHIP MICA	UC342H1500J 150PF 500WV
5101	C328		00MDF95330500	00MDF95330500	CHIP MICA	UC232H0330J 33PF 500WV
5101	C351		00MDF95331500	00MDF95331500	CHIP MICA	UC342H3300J 330PF 500WV
5101	C352		00MDF95151500	00MDF95151500	CHIP MICA	UC342H1500J 150PF 500WV
5101	C353		00MDF95330500	00MDF95330500	CHIP MICA	UC232H0330J 33PF 500WV
5101	C371		nsp	00MOA47701650	ELECT. CAP.	470 UF M 16V ARA
5101	C372		nsp	00MOA47701650	ELECT. CAP.	470 UF M 16V ARA
5101	C376		00MDF95331500	00MDF95331500	CHIP MICA	UC342H3300J 330PF 500WV
5101	C377		00MDF95151500	00MDF95151500	CHIP MICA	UC342H1500J 150PF 500WV
5101	C378		00MDF95330500	00MDF95330500	CHIP MICA	UC232H0330J 33PF 500WV
5101	C402		00MDF91100500	00MDF91100500	CHIP MICA	UC232H0100D 10PF 500WV
5101	C403		00MDF95330500	00MDF95330500	CHIP MICA	UC232H0330J 33PF 500WV
5101	C404		00MDF95102510	00MDF95102510	CHIP MICA	UC552A1001J 1000PF 100WV
5101	C405		nsp	00MOA10702540	ELECT. CAP.	100UF 25V ARS
5101	C406		00M75060501P0	00M75060501P0	JUMPER	
5101	C421		nsp	00MOA47701650	ELECT. CAP.	470 UF M 16V ARA
5101	C422		nsp	00MOA47701650	ELECT. CAP.	470 UF M 16V ARA
5101	C427		00MDF91100500	00MDF91100500	CHIP MICA	UC232H0100D 10PF 500WV
5101	C428		00MDF95330500	00MDF95330500	CHIP MICA	UC232H0330J 33PF 500WV
5101	C429		00MDF95102510	00MDF95102510	CHIP MICA	UC552A1001J 1000PF 100WV
5101	C430		nsp	00MOA10702540	ELECT. CAP.	100UF 25V ARS
5101	C431		00M75060501P0	00M75060501P0	JUMPER	
5101	C452		00MDF91100500	00MDF91100500	CHIP MICA	UC232H0100D 10PF 500WV
5101	C453		00MDF95330500	00MDF95330500	CHIP MICA	UC232H0330J 33PF 500WV
5101	C454		00MDF95102510	00MDF95102510	CHIP MICA	UC552A1001J 1000PF 100WV
5101	C455		nsp	00MOA10702540	ELECT. CAP.	100UF 25V ARS
5101	C456		00M75060501P0	00M75060501P0	JUMPER	
5101	C471		nsp	00MOA47701650	ELECT. CAP.	470 UF M 16V ARA
5101	C472		nsp	00MOA47701650	ELECT. CAP.	470 UF M 16V ARA
5101	C477		00MDF91100500	00MDF91100500	CHIP MICA	UC232H0100D 10PF 500WV
5101	C478		00MDF95330500	00MDF95330500	CHIP MICA	UC232H0330J 33PF 500WV
5101	C479		00MDF95102510	00MDF95102510	CHIP MICA	UC552A1001J 1000PF 100WV
5101	C480		nsp	00MOA10702540	ELECT. CAP.	100UF 25V ARS
5101	C481		00M75060501P0	00M75060501P0	JUMPER	
5101	CN12		nsp	00MOA10603540	ELECT. CAP.	10 UF 35V ARS
5101	CN15		nsp	00MDK98104200	CERAMIC CAP.	GRM39F104Z16 0.1UF MURATA
5101	D101		00MHZ20028050	00MHZ20028050	CHIP DIODE	1SS301
5101	D201		00MHZ20007210	00MHZ20007210	CHIP DIODE	IMN10 DIODE ARRAY
5101	D202		00MHZ20018050	00MHZ20018050	CHIP DIODE	1SS302 (TOSHIBA)
5101	D226		00MHZ20007210	00MHZ20007210	CHIP DIODE	IMN10 DIODE ARRAY
5101	D227		00MHZ20018050	00MHZ20018050	CHIP DIODE	1SS302 (TOSHIBA)

NOTE : “nsp” PARTS IS LISTED FOR REFERENCE ONLY, MARANTZ WILL NOT SUPPLY THESE PARTS.

P.C.B. NAME	POS. NO.	VERS. COLOR	PART NO. (FOR EUR)	PART NO. (MJI)	PART NAME	DESCRIPTION
5101	D251		00MHZ20007210	00MHZ20007210	CHIP DIODE	IMN10 DIODE ARRAY
5101	D252		00MHZ20018050	00MHZ20018050	CHIP DIODE	1SS302 (TOSHIBA)
5101	D276		00MHZ20007210	00MHZ20007210	CHIP DIODE	IMN10 DIODE ARRAY
5101	D277		00MHZ20018050	00MHZ20018050	CHIP DIODE	1SS302 (TOSHIBA)
5101	D301		00MHZ20007210	00MHZ20007210	CHIP DIODE	IMN10 DIODE ARRAY
5101	D302		00MHZ20018050	00MHZ20018050	CHIP DIODE	1SS302 (TOSHIBA)
5101	D326		00MHZ20007210	00MHZ20007210	CHIP DIODE	IMN10 DIODE ARRAY
5101	D327		00MHZ20018050	00MHZ20018050	CHIP DIODE	1SS302 (TOSHIBA)
5101	D351		00MHZ20007210	00MHZ20007210	CHIP DIODE	IMN10 DIODE ARRAY
5101	D352		00MHZ20018050	00MHZ20018050	CHIP DIODE	1SS302 (TOSHIBA)
5101	D376		00MHZ20007210	00MHZ20007210	CHIP DIODE	IMN10 DIODE ARRAY
5101	D377		00MHZ20018050	00MHZ20018050	CHIP DIODE	1SS302 (TOSHIBA)
5101	D401		00MHZ20007210	00MHZ20007210	CHIP DIODE	IMN10 DIODE ARRAY
5101	D402		00MHZ20018050	00MHZ20018050	CHIP DIODE	1SS302 (TOSHIBA)
5101	D403		00MHZ20007210	00MHZ20007210	CHIP DIODE	IMN10 DIODE ARRAY
5101	D426		00MHZ20007210	00MHZ20007210	CHIP DIODE	IMN10 DIODE ARRAY
5101	D427		00MHZ20018050	00MHZ20018050	CHIP DIODE	1SS302 (TOSHIBA)
5101	D428		00MHZ20007210	00MHZ20007210	CHIP DIODE	IMN10 DIODE ARRAY
5101	D451		00MHZ20007210	00MHZ20007210	CHIP DIODE	IMN10 DIODE ARRAY
5101	D452		00MHZ20018050	00MHZ20018050	CHIP DIODE	1SS302 (TOSHIBA)
5101	D453		00MHZ20007210	00MHZ20007210	CHIP DIODE	IMN10 DIODE ARRAY
5101	D476		00MHZ20007210	00MHZ20007210	CHIP DIODE	IMN10 DIODE ARRAY
5101	D477		00MHZ20018050	00MHZ20018050	CHIP DIODE	1SS302 (TOSHIBA)
5101	D478		00MHZ20007210	00MHZ20007210	CHIP DIODE	IMN10 DIODE ARRAY
5101	DN21		00MHZ20028050	00MHZ20028050	CHIP DIODE	1SS301
5101	DN22		00MHZ20028050	00MHZ20028050	CHIP DIODE	1SS301
5101	L101		00MLU12222010	00MLU12222010	CHIP INDUCTANCE	NL322522-2R2M
5101	L104		00MFC90020110	00MFC90020110	FERRITE CORE	BLM11B601S CHIP FERRITE
5101	L202		00MFC90030070	00MFC90030070	FERRITE CORE	BLM31A02 CHIP INDUCTOR
5101	L252		00MFC90030070	00MFC90030070	FERRITE CORE	BLM31A02 CHIP INDUCTOR
5101	LN21		00MLY20120620	00MLY20120620	RELAY	ED2-12NU NEC 12V RELAY
5101	LN22		00MLY20120620	00MLY20120620	RELAY	ED2-12NU NEC 12V RELAY
5101	Q101		00MHC10250990	00MHC10250990	IC	XC2S15-5VQ100C FPGA XILINX
5101	Q102		00MHC10249990	00MHC10249990	IC	AT49BV001ANT-55TI FOR SA-11
5101	Q103		00MHC10436050	00MHC10436050	IC	TC7SH86FU
5101	Q104		00MHC008905K0	00MHC008905K0	IC	TC7SZ08FU
5101	Q106		00MHC10114170	00MHC10114170	IC	DSP56364FU100 AUDIO DSP
5101	Q107		00MHC10251990	00MHC10251990	IC	1XCF01S FLASH FOR SA-11S1
5101	Q108		00MHC98203090	00MHC98203090	IC	NJU7222U33-TE1 3.3V REG.
5101	Q109		00MHC98102090	00MHC98102090	IC	NJM2880U25-TE1 2.5V REG JRC
5101	Q110		00MBA21303000	00MBA21303000	SEMICON.COMP	DTC124EU,RN1303 UMT TYPE
5101	Q111		00MHX300012B0	00MHX300012B0	CHIP TR.	2SC4081(R.S) 2SC4116(GR.BL)
5101	Q153		00MHX300012B0	00MHX300012B0	CHIP TR.	2SC4081(R.S) 2SC4116(GR.BL)
5101	Q154		00MHC10436050	00MHC10436050	IC	TC7SH86FU
5101	Q201		00MHC10018350	00MHC10018350	IC	SM5866AS-G DSD/PCM DAC NPC
5101	Q211		00MHF203891A0	00MHF203891A0	F.E.T.	2SK389FM-BL
5101	Q212		00MHX328731B0	00MHX328731B0	CHIP TR.	2SC2873 (Y)
5101	Q213		00MHX113121B0	00MHX113121B0	CHIP TR.	2SA1312 (B)
5101	Q214		00MHX113121B0	00MHX113121B0	CHIP TR.	2SA1312 (B)
5101	Q215		00MHX333241B0	00MHX333241B0	CHIP TR.	2SC3324 (B)
5101	Q216		00MHF201701H0	00MHF201701H0	F.E.T.	2SK170 V LANK TOSHIBA
5101	Q217		00MHF100741H0	00MHF100741H0	F.E.T.	2SJ74 V LANK TOSHIBA
5101	Q226		00MHF203891A0	00MHF203891A0	F.E.T.	2SK389FM-BL
5101	Q227		00MHX328731B0	00MHX328731B0	CHIP TR.	2SC2873 (Y)
5101	Q228		00MHX113121B0	00MHX113121B0	CHIP TR.	2SA1312 (B)
5101	Q229		00MHX113121B0	00MHX113121B0	CHIP TR.	2SA1312 (B)
5101	Q230		00MHX333241B0	00MHX333241B0	CHIP TR.	2SC3324 (B)
5101	Q231		00MHF201701H0	00MHF201701H0	F.E.T.	2SK170 V LANK TOSHIBA
5101	Q232		00MHF100741H0	00MHF100741H0	F.E.T.	2SJ74 V LANK TOSHIBA
5101	Q251		00MHC10018350	00MHC10018350	IC	SM5866AS-G DSD/PCM DAC NPC
5101	Q261		00MHF203891A0	00MHF203891A0	F.E.T.	2SK389FM-BL
5101	Q262		00MHX328731B0	00MHX328731B0	CHIP TR.	2SC2873 (Y)
5101	Q263		00MHX113121B0	00MHX113121B0	CHIP TR.	2SA1312 (B)
5101	Q264		00MHX113121B0	00MHX113121B0	CHIP TR.	2SA1312 (B)
5101	Q265		00MHX333241B0	00MHX333241B0	CHIP TR.	2SC3324 (B)
5101	Q266		00MHF201701H0	00MHF201701H0	F.E.T.	2SK170 V LANK TOSHIBA
5101	Q267		00MHF100741H0	00MHF100741H0	F.E.T.	2SJ74 V LANK TOSHIBA

NOTE : “nsp” PARTS IS LISTED FOR REFERENCE ONLY, MARANTZ WILL NOT SUPPLY THESE PARTS.

P.C.B. NAME	POS. NO.	VERS. COLOR	PART NO. (FOR EUR)	PART NO. (MJI)	PART NAME	DESCRIPTION
5101	Q276		00MHF203891A0	00MHF203891A0	F.E.T.	2SK389FM-BL
5101	Q277		00MHX328731B0	00MHX328731B0	CHIP TR.	2SC2873 (Y)
5101	Q278		00MHX113121B0	00MHX113121B0	CHIP TR.	2SA1312 (B)
5101	Q279		00MHX113121B0	00MHX113121B0	CHIP TR.	2SA1312 (B)
5101	Q280		00MHX333241B0	00MHX333241B0	CHIP TR.	2SC3324 (B)
5101	Q281		00MHF201701H0	00MHF201701H0	F.E.T.	2SK170 V LANK TOSHIBA
5101	Q282		00MHF100741H0	00MHF100741H0	F.E.T.	2SJ74 V LANK TOSHIBA
5101	Q292		00MHC10179090	00MHC10179090	IC	NJM3414AM-TE DUAL OP-AMP
5101	Q293		00MHC91506090	00MHC91506090	IC	NJM2887DL2 JRC TAPING
5101	Q294		00MHC91506090	00MHC91506090	IC	NJM2887DL2 JRC TAPING
5101	Q301		00MHF203891A0	00MHF203891A0	F.E.T.	2SK389FM-BL
5101	Q302		00MHX328731B0	00MHX328731B0	CHIP TR.	2SC2873 (Y)
5101	Q303		00MHX113121B0	00MHX113121B0	CHIP TR.	2SA1312 (B)
5101	Q304		00MHX113121B0	00MHX113121B0	CHIP TR.	2SA1312 (B)
5101	Q305		00MHX333241B0	00MHX333241B0	CHIP TR.	2SC3324 (B)
5101	Q306		00MHF201701H0	00MHF201701H0	F.E.T.	2SK170 V LANK TOSHIBA
5101	Q307		00MHF100741H0	00MHF100741H0	F.E.T.	2SJ74 V LANK TOSHIBA
5101	Q326		00MHF203891A0	00MHF203891A0	F.E.T.	2SK389FM-BL
5101	Q327		00MHX328731B0	00MHX328731B0	CHIP TR.	2SC2873 (Y)
5101	Q328		00MHX113121B0	00MHX113121B0	CHIP TR.	2SA1312 (B)
5101	Q329		00MHX113121B0	00MHX113121B0	CHIP TR.	2SA1312 (B)
5101	Q330		00MHX333241B0	00MHX333241B0	CHIP TR.	2SC3324 (B)
5101	Q331		00MHF201701H0	00MHF201701H0	F.E.T.	2SK170 V LANK TOSHIBA
5101	Q332		00MHF100741H0	00MHF100741H0	F.E.T.	2SJ74 V LANK TOSHIBA
5101	Q351		00MHF203891A0	00MHF203891A0	F.E.T.	2SK389FM-BL
5101	Q352		00MHX328731B0	00MHX328731B0	CHIP TR.	2SC2873 (Y)
5101	Q353		00MHX113121B0	00MHX113121B0	CHIP TR.	2SA1312 (B)
5101	Q354		00MHX113121B0	00MHX113121B0	CHIP TR.	2SA1312 (B)
5101	Q355		00MHX333241B0	00MHX333241B0	CHIP TR.	2SC3324 (B)
5101	Q356		00MHF201701H0	00MHF201701H0	F.E.T.	2SK170 V LANK TOSHIBA
5101	Q357		00MHF100741H0	00MHF100741H0	F.E.T.	2SJ74 V LANK TOSHIBA
5101	Q376		00MHF203891A0	00MHF203891A0	F.E.T.	2SK389FM-BL
5101	Q377		00MHX328731B0	00MHX328731B0	CHIP TR.	2SC2873 (Y)
5101	Q378		00MHX113121B0	00MHX113121B0	CHIP TR.	2SA1312 (B)
5101	Q379		00MHX113121B0	00MHX113121B0	CHIP TR.	2SA1312 (B)
5101	Q380		00MHX333241B0	00MHX333241B0	CHIP TR.	2SC3324 (B)
5101	Q381		00MHF201701H0	00MHF201701H0	F.E.T.	2SK170 V LANK TOSHIBA
5101	Q382		00MHF100741H0	00MHF100741H0	F.E.T.	2SJ74 V LANK TOSHIBA
5101	Q401		00MHF203891A0	00MHF203891A0	F.E.T.	2SK389FM-BL
5101	Q402		00MHX328731B0	00MHX328731B0	CHIP TR.	2SC2873 (Y)
5101	Q403		00MHX113121B0	00MHX113121B0	CHIP TR.	2SA1312 (B)
5101	Q404		00MHX113121B0	00MHX113121B0	CHIP TR.	2SA1312 (B)
5101	Q405		00MHX333241B0	00MHX333241B0	CHIP TR.	2SC3324 (B)
5101	Q406		00MHF201701H0	00MHF201701H0	F.E.T.	2SK170 V LANK TOSHIBA
5101	Q407		00MHF100741H0	00MHF100741H0	F.E.T.	2SJ74 V LANK TOSHIBA
5101	Q408		00MHX113121B0	00MHX113121B0	CHIP TR.	2SA1312 (B)
5101	Q409		00MHX113121B0	00MHX113121B0	CHIP TR.	2SA1312 (B)
5101	Q410		00MHX113121B0	00MHX113121B0	CHIP TR.	2SA1312 (B)
5101	Q411		00MHX333241B0	00MHX333241B0	CHIP TR.	2SC3324 (B)
5101	Q412		00MHX333241B0	00MHX333241B0	CHIP TR.	2SC3324 (B)
5101	Q413		00MHX333241B0	00MHX333241B0	CHIP TR.	2SC3324 (B)
5101	Q414		00MHT327052A0	00MHT327052A0	TRANSISTOR	2SC2705 O OR Y TAPING TOSHIBA
5101	Q415		00MHT111452A0	00MHT111452A0	TRANSISTOR	2SA1145 O OR Y TAPING TOSHIBA
5101	Q426		00MHF203891A0	00MHF203891A0	F.E.T.	2SK389FM-BL
5101	Q427		00MHX328731B0	00MHX328731B0	CHIP TR.	2SC2873 (Y)
5101	Q428		00MHX113121B0	00MHX113121B0	CHIP TR.	2SA1312 (B)
5101	Q429		00MHX113121B0	00MHX113121B0	CHIP TR.	2SA1312 (B)
5101	Q430		00MHX333241B0	00MHX333241B0	CHIP TR.	2SC3324 (B)
5101	Q431		00MHF201701H0	00MHF201701H0	F.E.T.	2SK170 V LANK TOSHIBA
5101	Q432		00MHF100741H0	00MHF100741H0	F.E.T.	2SJ74 V LANK TOSHIBA
5101	Q433		00MHX113121B0	00MHX113121B0	CHIP TR.	2SA1312 (B)
5101	Q434		00MHX113121B0	00MHX113121B0	CHIP TR.	2SA1312 (B)
5101	Q435		00MHX113121B0	00MHX113121B0	CHIP TR.	2SA1312 (B)
5101	Q436		00MHX333241B0	00MHX333241B0	CHIP TR.	2SC3324 (B)
5101	Q437		00MHX333241B0	00MHX333241B0	CHIP TR.	2SC3324 (B)
5101	Q438		00MHX333241B0	00MHX333241B0	CHIP TR.	2SC3324 (B)
5101	Q439		00MHT327052A0	00MHT327052A0	TRANSISTOR	2SC2705 O OR Y TAPING TOSHIBA

NOTE : “nsp” PARTS IS LISTED FOR REFERENCE ONLY, MARANTZ WILL NOT SUPPLY THESE PARTS.

P.C.B. NAME	POS. NO.	VERS. COLOR	PART NO. (FOR EUR)	PART NO. (MJI)	PART NAME	DESCRIPTION
5101	Q440		00MHT111452A0	00MHT111452A0	TRANSISTOR	2SA1145 O OR Y TAPING TOSHIBA
5101	Q451		00MHF203891A0	00MHF203891A0	F.E.T.	2SK389FM-BL
5101	Q452		00MHX328731B0	00MHX328731B0	CHIP TR.	2SC2873 (Y)
5101	Q453		00MHX113121B0	00MHX113121B0	CHIP TR.	2SA1312 (B)
5101	Q454		00MHX113121B0	00MHX113121B0	CHIP TR.	2SA1312 (B)
5101	Q455		00MHX333241B0	00MHX333241B0	CHIP TR.	2SC3324 (B)
5101	Q456		00MHF201701H0	00MHF201701H0	F.E.T.	2SK170 V LANK TOSHIBA
5101	Q457		00MHF100741H0	00MHF100741H0	F.E.T.	2SJ74 V LANK TOSHIBA
5101	Q458		00MHX113121B0	00MHX113121B0	CHIP TR.	2SA1312 (B)
5101	Q459		00MHX113121B0	00MHX113121B0	CHIP TR.	2SA1312 (B)
5101	Q460		00MHX113121B0	00MHX113121B0	CHIP TR.	2SA1312 (B)
5101	Q461		00MHX333241B0	00MHX333241B0	CHIP TR.	2SC3324 (B)
5101	Q462		00MHX333241B0	00MHX333241B0	CHIP TR.	2SC3324 (B)
5101	Q463		00MHX333241B0	00MHX333241B0	CHIP TR.	2SC3324 (B)
5101	Q464		00MHT327052A0	00MHT327052A0	TRANSISTOR	2SC2705 O OR Y TAPING TOSHIBA
5101	Q465		00MHT111452A0	00MHT111452A0	TRANSISTOR	2SA1145 O OR Y TAPING TOSHIBA
5101	Q476		00MHF203891A0	00MHF203891A0	F.E.T.	2SK389FM-BL
5101	Q477		00MHX328731B0	00MHX328731B0	CHIP TR.	2SC2873 (Y)
5101	Q478		00MHX113121B0	00MHX113121B0	CHIP TR.	2SA1312 (B)
5101	Q479		00MHX113121B0	00MHX113121B0	CHIP TR.	2SA1312 (B)
5101	Q480		00MHX333241B0	00MHX333241B0	CHIP TR.	2SC3324 (B)
5101	Q481		00MHF201701H0	00MHF201701H0	F.E.T.	2SK170 V LANK TOSHIBA
5101	Q482		00MHF100741H0	00MHF100741H0	F.E.T.	2SJ74 V LANK TOSHIBA
5101	Q483		00MHX113121B0	00MHX113121B0	CHIP TR.	2SA1312 (B)
5101	Q484		00MHX113121B0	00MHX113121B0	CHIP TR.	2SA1312 (B)
5101	Q485		00MHX113121B0	00MHX113121B0	CHIP TR.	2SA1312 (B)
5101	Q486		00MHX333241B0	00MHX333241B0	CHIP TR.	2SC3324 (B)
5101	Q487		00MHX333241B0	00MHX333241B0	CHIP TR.	2SC3324 (B)
5101	Q488		00MHX333241B0	00MHX333241B0	CHIP TR.	2SC3324 (B)
5101	Q489		00MHT327052A0	00MHT327052A0	TRANSISTOR	2SC2705 O OR Y TAPING TOSHIBA
5101	Q490		00MHT111452A0	00MHT111452A0	TRANSISTOR	2SA1145 O OR Y TAPING TOSHIBA
5101	QN11		00MHX100012A0	00MHX100012A0	CHIP TR.	2SA1586 (Y,GR) 2SA1576A (Q,R)
5101	QN12		00MBA21303000	00MBA21303000	SEMICON.COMP	DTC124EU,RN1303 UMT TYPE
5101	QN13		00MHX300012A0	00MHX300012A0	CHIP TR.	2SC4081 (Q,R) 2SC4116 (Y,GR)
5101	QN14		00MHX300012A0	00MHX300012A0	CHIP TR.	2SC4081 (Q,R) 2SC4116 (Y,GR)
5101	QN15		00MHX207982A0	00MHX207982A0	CHIP TR.	2SB798 (DL,DK)
5101	QN16		00MBA21303000	00MBA21303000	SEMICON.COMP	DTC124EU,RN1303 UMT TYPE
5101	R103		nsp	00MNN05472610	CHIP RESISTOR	4.7K OHM +- 5% 1/16W
5101	R104		nsp	00MNN05223610	CHIP RESISTOR	22K OHM +- 5% 1/16W
5101	R105		nsp	00MNN05223610	CHIP RESISTOR	22K OHM +- 5% 1/16W
5101	R106		nsp	00MNN05223610	CHIP RESISTOR	22K OHM +- 5% 1/16W
5101	R108		nsp	00MNN05332610	CHIP RESISTOR	3.3K OHM +- 5% 1/16W
5101	R109		nsp	00MNN05331610	CHIP RESISTOR	330 OHM +- 5% 1/16W
5101	R110		nsp	00MNN05000610	CHIP RESISTOR	0 OHM +- 5% 1/16W
5101	R111		nsp	00MNN05101610	CHIP RESISTOR	100 OHM +- 5% 1/16W
5101	R112		nsp	00MNN05222610	CHIP RESISTOR	2.2K OHM +- 5% 1/16W
5101	R113		nsp	00MNN05151610	CHIP RESISTOR	150 OHM +- 5% 1/16W
5101	R114		nsp	00MNN05101610	CHIP RESISTOR	100 OHM +- 5% 1/16W
5101	R116		nsp	00MNN05101610	CHIP RESISTOR	100 OHM +- 5% 1/16W
5101	R122		nsp	00MNN05222610	CHIP RESISTOR	2.2K OHM +- 5% 1/16W
5101	R123		nsp	00MNN05101610	CHIP RESISTOR	100 OHM +- 5% 1/16W
5101	R124		nsp	00MNN05101610	CHIP RESISTOR	100 OHM +- 5% 1/16W
5101	R125		nsp	00MNN05101610	CHIP RESISTOR	100 OHM +- 5% 1/16W
5101	R126		nsp	00MNN05101610	CHIP RESISTOR	100 OHM +- 5% 1/16W
5101	R127		nsp	00MNN05101610	CHIP RESISTOR	100 OHM +- 5% 1/16W
5101	R128		nsp	00MNN05101610	CHIP RESISTOR	100 OHM +- 5% 1/16W
5101	R129		nsp	00MNN05101610	CHIP RESISTOR	100 OHM +- 5% 1/16W
5101	R130		nsp	00MNN05101610	CHIP RESISTOR	100 OHM +- 5% 1/16W
5101	R133		nsp	00MNN05101610	CHIP RESISTOR	100 OHM +- 5% 1/16W
5101	R134		nsp	00MNN05472610	CHIP RESISTOR	4.7K OHM +- 5% 1/16W
5101	R140		nsp	00MNN05223610	CHIP RESISTOR	22K OHM +- 5% 1/16W
5101	R141		nsp	00MNN05223610	CHIP RESISTOR	22K OHM +- 5% 1/16W
5101	R142		nsp	00MNN05223610	CHIP RESISTOR	22K OHM +- 5% 1/16W
5101	R143		nsp	00MNN05100610	CHIP RESISTOR	10 OHM +- 5% 1/16W
5101	R145		nsp	00MNN05223610	CHIP RESISTOR	22K OHM +- 5% 1/16W
5101	R146		nsp	00MNN05223610	CHIP RESISTOR	22K OHM +- 5% 1/16W
5101	R147		nsp	00MNN05104610	CHIP RESISTOR	100K OHM +- 5% 1/16W

NOTE : “nsp” PARTS IS LISTED FOR REFERENCE ONLY, MARANTZ WILL NOT SUPPLY THESE PARTS.

P.C.B. NAME	POS. NO.	VERS. COLOR	PART NO. (FOR EUR)	PART NO. (MJI)	PART NAME	DESCRIPTION
5101	R148		nsp	00MNN05223610	CHIP RESISTOR	22K OHM +- 5% 1/16W
5101	R149		nsp	00MNN05223610	CHIP RESISTOR	22K OHM +- 5% 1/16W
5101	R150		nsp	00MNN05223610	CHIP RESISTOR	22K OHM +- 5% 1/16W
5101	R152		nsp	00MNN05223610	CHIP RESISTOR	22K OHM +- 5% 1/16W
5101	R153		nsp	00MNN05101610	CHIP RESISTOR	100 OHM +- 5% 1/16W
5101	R155		nsp	00MNN05223610	CHIP RESISTOR	22K OHM +- 5% 1/16W
5101	R201		nsp	00MNN05222610	CHIP RESISTOR	2.2K OHM +- 5% 1/16W
5101	R203		nsp	00MNN05562610	CHIP RESISTOR	5.6K OHM +- 5% 1/16W
5101	R205		00MRA01030780	00MRA01030780	TRIMMING RESIST	10KOHM RH0638C14R TYPE ALPS
5101	R218		00MNI05101110	00MNI05101110	CHIP RESISTOR	100 OHM +- 5% 1/10W
5101	R233		00MNI05101110	00MNI05101110	CHIP RESISTOR	100 OHM +- 5% 1/10W
5101	R251		nsp	00MNN05222610	CHIP RESISTOR	2.2K OHM +- 5% 1/16W
5101	R253		nsp	00MNN05562610	CHIP RESISTOR	5.6K OHM +- 5% 1/16W
5101	R268		00MNI05101110	00MNI05101110	CHIP RESISTOR	100 OHM +- 5% 1/10W
5101	R283		00MNI05101110	00MNI05101110	CHIP RESISTOR	100 OHM +- 5% 1/10W
5101	R309		00MNI05101110	00MNI05101110	CHIP RESISTOR	100 OHM +- 5% 1/10W
5101	R334		00MNI05101110	00MNI05101110	CHIP RESISTOR	100 OHM +- 5% 1/10W
5101	R359		00MNI05101110	00MNI05101110	CHIP RESISTOR	100 OHM +- 5% 1/10W
5101	R384		00MNI05101110	00MNI05101110	CHIP RESISTOR	100 OHM +- 5% 1/10W
5101	R411		00MNI05101110	00MNI05101110	CHIP RESISTOR	100 OHM +- 5% 1/10W
5101	R436		00MNI05101110	00MNI05101110	CHIP RESISTOR	100 OHM +- 5% 1/10W
5101	R461		00MNI05101110	00MNI05101110	CHIP RESISTOR	100 OHM +- 5% 1/10W
5101	R486		00MNI05101110	00MNI05101110	CHIP RESISTOR	100 OHM +- 5% 1/10W
5101	RN11		nsp	00MNN05472610	CHIP RESISTOR	4.7K OHM +- 5% 1/16W
5101	RN12		nsp	00MNN05472610	CHIP RESISTOR	4.7K OHM +- 5% 1/16W
5101	RN13		nsp	00MNN05472610	CHIP RESISTOR	4.7K OHM +- 5% 1/16W
5101	RN14		nsp	00MNN05472610	CHIP RESISTOR	4.7K OHM +- 5% 1/16W
5101	RN15		nsp	00MNN05472610	CHIP RESISTOR	4.7K OHM +- 5% 1/16W
5101	RN16		nsp	00MNN05332610	CHIP RESISTOR	3.3K OHM +- 5% 1/16W
5101	RN17		nsp	00MNN05224610	CHIP RESISTOR	220K OHM +- 5% 1/16W
5101	RN18		nsp	00MNN05472610	CHIP RESISTOR	4.7K OHM +- 5% 1/16W
5101	X101		00MJX67001480	00MJX67001480	CRYSTAL	67.7376MHZ 3RD OVER TONE HZ
					FRONT PCB (00MWG18AK102-)	
5102	CY03		nsp	00MDK98104300	CERAMIC CAP.	0.1UF 50V F C1608JF1H104Z
5102	CY05		nsp	00MDK98474200	CERAMIC CAP.	GRM39F474Z16PT 0.47UF F 16V
5102	CY08		nsp	00MDK98474200	CERAMIC CAP.	GRM39F474Z16PT 0.47UF F 16V
5102	CY09		nsp	00MDK98474200	CERAMIC CAP.	GRM39F474Z16PT 0.47UF F 16V
5102	CY10		nsp	00MDK98474200	CERAMIC CAP.	GRM39F474Z16PT 0.47UF F 16V
5102	CY11		nsp	00MDK98474200	CERAMIC CAP.	GRM39F474Z16PT 0.47UF F 16V
5102	CY12		nsp	00MDK98474200	CERAMIC CAP.	GRM39F474Z16PT 0.47UF F 16V
5102	CY15		nsp	00MDK98104300	CERAMIC CAP.	0.1UF 50V F C1608JF1H104Z
5102	CY16		nsp	00MDK98104300	CERAMIC CAP.	0.1UF 50V F C1608JF1H104Z
5102	CY18		nsp	00MDK98104300	CERAMIC CAP.	0.1UF 50V F C1608JF1H104Z
5102	CY19		nsp	00MDK96102300	CERAMIC CAP.	1000 PF +- 10 % B 50V GR36
5102	CY20		nsp	00MDK96102300	CERAMIC CAP.	1000 PF +- 10 % B 50V GR36
5102	CY21		nsp	00MDK96102300	CERAMIC CAP.	1000 PF +- 10 % B 50V GR36
5102	CY22		nsp	00MDK96102300	CERAMIC CAP.	1000 PF +- 10 % B 50V GR36
5102	CY44		nsp	00MDK98104300	CERAMIC CAP.	0.1UF 50V F C1608JF1H104Z
5102	CY46		nsp	00MDK98104300	CERAMIC CAP.	0.1UF 50V F C1608JF1H104Z
5102	CY48		nsp	00MDK98104300	CERAMIC CAP.	0.1UF 50V F C1608JF1H104Z
5102	LY41		00MFC90020110	00MFC90020110	FERRITE CORE	BLM11B601S CHIP FERRITE
5102	LY42		00MFC90020110	00MFC90020110	FERRITE CORE	BLM11B601S CHIP FERRITE
5102	LY43		00MFC90020110	00MFC90020110	FERRITE CORE	BLM11B601S CHIP FERRITE
5102	QY02		00MHX300012A0	00MHX300012A0	CHIP TR.	2SC4081 (Q,R) 2SC4116 (Y,GR)
5102	QY03		00MHX300012A0	00MHX300012A0	CHIP TR.	2SC4081 (Q,R) 2SC4116 (Y,GR)
5102	QY04		00MHX300012A0	00MHX300012A0	CHIP TR.	2SC4081 (Q,R) 2SC4116 (Y,GR)
5102	QY07		00MHX300012A0	00MHX300012A0	CHIP TR.	2SC4081 (Q,R) 2SC4116 (Y,GR)
5102	QY42		00MHC98203090	00MHC98203090	IC	NJU7222U33-TE1 3.3V REG.
5102	QY43		00MHX300012A0	00MHX300012A0	CHIP TR.	2SC4081 (Q,R) 2SC4116 (Y,GR)
5102	QY44		00MHX300012A0	00MHX300012A0	CHIP TR.	2SC4081 (Q,R) 2SC4116 (Y,GR)
5102	RY05		nsp	00MNN05101610	CHIP RESISTOR	100 OHM +- 5% 1/16W
5102	RY06		nsp	00MNN05102610	CHIP RESISTOR	1K OHM +- 5% 1/16W
5102	RY08		nsp	00MNN05472610	CHIP RESISTOR	4.7K OHM +- 5% 1/16W
5102	RY09		nsp	00MNN05472610	CHIP RESISTOR	4.7K OHM +- 5% 1/16W
5102	RY10		nsp	00MNN05683610	CHIP RESISTOR	68K OHM +- 5% 1/16W
5102	RY11		nsp	00MNN05223610	CHIP RESISTOR	22K OHM +- 5% 1/16W
5102	RY12		nsp	00MNN05223610	CHIP RESISTOR	22K OHM +- 5% 1/16W

NOTE : “nsp” PARTS IS LISTED FOR REFERENCE ONLY, MARANTZ WILL NOT SUPPLY THESE PARTS.

P.C.B. NAME	POS. NO.	VERS. COLOR	PART NO. (FOR EUR)	PART NO. (MJI)	PART NAME	DESCRIPTION
5102	RY13		nsp	00MNN05472610	CHIP RESISTOR	4.7K OHM +- 5% 1/16W
5102	RY14		nsp	00MNN05102610	CHIP RESISTOR	1K OHM +- 5% 1/16W
5102	RY21		nsp	00MNN05102610	CHIP RESISTOR	1K OHM +- 5% 1/16W
5102	RY22		nsp	00MNN05103610	CHIP RESISTOR	10K OHM +- 5% 1/16W
5102	RY23		nsp	00MNN05470610	CHIP RESISTOR	47 OHM +- 5% 1/16W
5102	RY24		nsp	00MNN05101610	CHIP RESISTOR	100 OHM +- 5% 1/16W
5102	RY56		nsp	00MNN05681610	CHIP RESISTOR	680 OHM +- 5% 1/16W
5102	RY57		nsp	00MNN05561610	CHIP RESISTOR	560 OHM +- 5% 1/16W
5102	RY59		nsp	00MNN05182610	CHIP RESISTOR	1.8K OHM +- 5% 1/16W
5102	RY60		nsp	00MNN05102610	CHIP RESISTOR	1K OHM +- 5% 1/16W
5102	RY61		nsp	00MNN05223610	CHIP RESISTOR	22K OHM +- 5% 1/16W
5102	SY01		00MSP01012030	00MSP01012030	PUSH SWITCH	SKHVBF 260GF RED
5102	ZF01		00MHW10008210	00MHW10008210	PHOTO UNIT	RPM6936-H4
					OPEN/CLOSE, NEXT, PREV, TACT SW PCB (00MWG18AK103-)	
5103	CY31		nsp	00MDK98104300	CERAMIC CAP.	0.1UF 50V F C1608JF1H104Z
5103	DY31		00MHI10046080	00MHI10046080	L.E.D.	BLUE LED SELU2E10C-P-E/F Φ3
5103	RY31		nsp	00MNN05181610	CHIP RESISTOR	180 OHM +- 5% 1/16W
5103	RY34		nsp	00MNN05103610	CHIP RESISTOR	10K OHM +- 5% 1/16W
5103	SY31		00MSP01012030	00MSP01012030	PUSH SWITCH	SKHVBF 260GF RED
5103	SY32		00MSP01012030	00MSP01012030	PUSH SWITCH	SKHVBF 260GF RED
5103	SY33		00MSP01012030	00MSP01012030	PUSH SWITCH	SKHVBF 260GF RED
					PLAY, STOP, PAUSE TACT SW PCB (00MWG18AK104-)	
5104	CY41		nsp	00MDK98104300	CERAMIC CAP.	0.1UF 50V F C1608JF1H104Z
5104	CY42		nsp	00MDK98104300	CERAMIC CAP.	0.1UF 50V F C1608JF1H104Z
5104	DY41		00MHI10046080	00MHI10046080	L.E.D.	BLUE LED SELU2E10C-P-E/F Φ3
5104	QY41		00MHX300012A0	00MHX300012A0	CHIP TR.	2SC4081 (Q,R) 2SC4116 (Y,GR)
5104	RY41		nsp	00MNN05151610	CHIP RESISTOR	150 OHM +- 5% 1/16W
5104	RY42		nsp	00MNN05181610	CHIP RESISTOR	180 OHM +- 5% 1/16W
5104	RY43		nsp	00MNN05271610	CHIP RESISTOR	270 OHM +- 5% 1/16W
5104	RY44		nsp	00MNN05151610	CHIP RESISTOR	150 OHM +- 5% 1/16W
5104	RY45		nsp	00MNN05471610	CHIP RESISTOR	470 OHM +- 5% 1/16W
5104	RY46		nsp	00MNN05103610	CHIP RESISTOR	10K OHM +- 5% 1/16W
5104	RY47		nsp	00MNN05222610	CHIP RESISTOR	2.2K OHM +- 5% 1/16W
5104	RY48		nsp	00MNN05101610	CHIP RESISTOR	100 OHM +- 5% 1/16W
5104	RY49		nsp	00MNN05101610	CHIP RESISTOR	100 OHM +- 5% 1/16W
5104	RY50		nsp	00MNN05101610	CHIP RESISTOR	100 OHM +- 5% 1/16W
5104	RY51		nsp	00MNN05101610	CHIP RESISTOR	100 OHM +- 5% 1/16W
5104	RY52		nsp	00MNN05101610	CHIP RESISTOR	100 OHM +- 5% 1/16W
5104	RY53		nsp	00MNN05101610	CHIP RESISTOR	100 OHM +- 5% 1/16W
5104	RY54		nsp	00MNN05101610	CHIP RESISTOR	100 OHM +- 5% 1/16W
5104	RY55		nsp	00MNN05101610	CHIP RESISTOR	100 OHM +- 5% 1/16W
5104	SY41		00MSP01012030	00MSP01012030	PUSH SWITCH	SKHVBF 260GF RED
5104	SY42		00MSP01012030	00MSP01012030	PUSH SWITCH	SKHVBF 260GF RED
5104	SY43		00MSP01012030	00MSP01012030	PUSH SWITCH	SKHVBF 260GF RED
					FRONT DISPLAY LED PCB (00MWG18AK105-)	
5105	CY71		nsp	00MDK98104300	CERAMIC CAP.	0.1UF 50V F C1608JF1H104Z
5105	DY71		00MHI10107210	00MHI10107210	L.E.D.	SML-010VTT86
5105	RY71		nsp	00MNN05103610	CHIP RESISTOR	10K OHM +- 5% 1/16W
					POWER SUPPLY PCB (00MWG18AK201-)	
5201	C801		nsp	00MOA68801620	ELECT. CAP.	6800 UF 16V RA2 TYPE
5201	C802		nsp	00MOA68801620	ELECT. CAP.	6800 UF 16V RA2 TYPE
5201	C805		nsp	00MOA33800610	ELECT. CAP.	3300UF M 6.3V RA-2
5201	C811		00MOB10803510	00MOB10803510	ELECT. CAP	1000UF 35V SPECIAL
5201	C813		nsp	00MOA22801620	ELECT. CAP.	2200UF 16V
5201	C820		nsp	00MOA47701640	ELECT. CAP.	470 UF 16V ARS
5201	C821		nsp	00MOA47802520	ELECT. CAP.	4700UF/25V RA-2
5201	C823		nsp	00MOA10803520	ELECT. CAP.	1000 UF M 35V RA-2
5201	C826		nsp	00MOA10803520	ELECT. CAP.	1000 UF M 35V RA-2
5201	C829		nsp	00MOA47602520	ELECT. CAP.	47 UF M 25V RA-2
5201	C831		nsp	00MOA47801620	ELECT. CAP.	4700UF 16V RA2
5201	C833		nsp	00MOA22801620	ELECT. CAP.	2200UF 16V
5201	C835		nsp	00MOA22702520	ELECT. CAP.	220 UF M 25V RA-2
5201	C851		00MOB47803520	00MOB47803520	ELECT. CAP	4700UF M 35V FOR HIFI
5201	C852		00MOB47803520	00MOB47803520	ELECT. CAP	4700UF M 35V FOR HIFI
5201	C855		nsp	00MOA10702550	ELECT. CAP.	100UF 25V ARA
5201	C856		nsp	00MOA10702550	ELECT. CAP.	100UF 25V ARA

NOTE : “nsp” PARTS IS LISTED FOR REFERENCE ONLY, MARANTZ WILL NOT SUPPLY THESE PARTS.

P.C.B. NAME	POS. NO.	VERS. COLOR	PART NO. (FOR EUR)	PART NO. (MJI)	PART NAME	DESCRIPTION
5201	C857		nsp	00MOA47702550	ELECT. CAP.	470 UF M 25V ARA
5201	C858		nsp	00MOA47702550	ELECT. CAP.	470 UF M 25V ARA
5201	CF54		nsp	00MOA10606320	ELECT. CAP.	10 UF 63V RA-2
5201	CN01		nsp	00MOA10803520	ELECT. CAP.	1000 UF M 35V RA-2
5201	CN02		nsp	00MOA10510020	ELECT. CAP.	1UF100V RA-2TYPE
5201	CN03		nsp	00MOA47505020	ELECT. CAP.	4.7 UF M 50V RA-2
5201	CT05		nsp	00MOA10702540	ELECT. CAP.	100UF 25V ARS
5201	▲ D801		00MHE10004100	00MHE10004100	DIODE	! FRH10A15
5201	▲ D802		00MHE10003100	00MHE10003100	DIODE	! FCH10A15
5201	▲ D811		00MHD20055100	00MHD20055100	DIODE	! SHOTTKY 11EQS10 1A 100V
5201	▲ D812		00MHD20055100	00MHD20055100	DIODE	! SHOTTKY 11EQS10 1A 100V
5201	▲ D813		00MHD20055100	00MHD20055100	DIODE	! SHOTTKY 11EQS10 1A 100V
5201	▲ D814		00MHD20055100	00MHD20055100	DIODE	! SHOTTKY 11EQS10 1A 100V
5201	▲ D821		00MHD20055100	00MHD20055100	DIODE	! SHOTTKY 11EQS10 1A 100V
5201	▲ D822		00MHD20055100	00MHD20055100	DIODE	! SHOTTKY 11EQS10 1A 100V
5201	▲ D823		00MHD20055100	00MHD20055100	DIODE	! SHOTTKY 11EQS10 1A 100V
5201	▲ D824		00MHD20055100	00MHD20055100	DIODE	! SHOTTKY 11EQS10 1A 100V
5201	D825		nsp	00MHD20002000	DIODE	1SS176,MA165,1SS254 30V 0.1A
5201	D826		00MHD31601000	00MHD31601000	ZENER DIODE	16V ZENER EQUIVALENT
5201	▲ D831		00MHD20055100	00MHD20055100	DIODE	! SHOTTKY 11EQS10 1A 100V
5201	▲ D832		00MHD20055100	00MHD20055100	DIODE	! SHOTTKY 11EQS10 1A 100V
5201	▲ D833		00MHD20055100	00MHD20055100	DIODE	! SHOTTKY 11EQS10 1A 100V
5201	▲ D834		00MHD20055100	00MHD20055100	DIODE	! SHOTTKY 11EQS10 1A 100V
5201	▲ D851		00MHE10004100	00MHE10004100	DIODE	! FRH10A15
5201	▲ D852		00MHE10003100	00MHE10003100	DIODE	! FCH10A15
5201	D856		00MHD30021010	00MHD30021010	ZENER DIODE	DIODE HZ6A3L (HITACHI)
5201	D857		00MHD30021010	00MHD30021010	ZENER DIODE	DIODE HZ6A3L (HITACHI)
5201	D858		nsp	00MHD20002000	DIODE	1SS176,MA165,1SS254 30V 0.1A
5201	D859		nsp	00MHD20002000	DIODE	1SS176,MA165,1SS254 30V 0.1A
5201	DF51		nsp	00MHD20002000	DIODE	1SS176,MA165,1SS254 30V 0.1A
5201	▲ DN01		00MHD20055100	00MHD20055100	DIODE	! SHOTTKY 11EQS10 1A 100V
5201	▲ DN02		00MHD20055100	00MHD20055100	DIODE	! SHOTTKY 11EQS10 1A 100V
5201	▲ DN03		00MHD20055100	00MHD20055100	DIODE	! SHOTTKY 11EQS10 1A 100V
5201	▲ DN04		00MHD20055100	00MHD20055100	DIODE	! SHOTTKY 11EQS10 1A 100V
5201	▲ DN05		00MHD20055100	00MHD20055100	DIODE	! SHOTTKY 11EQS10 1A 100V
5201	DN06		00MHD30471000	00MHD30471000	ZENER DIODE	4.7V ZENER EQUIVALENT
5201	DN07		nsp	00MHD20002000	DIODE	1SS176,MA165,1SS254 30V 0.1A
5201	▲ F811	/F1N	nsp	00MFS10100350	FUSE	# 1A 250V UL,CSA,MITI TYPE FBT
5201	▲ F811	/L1G	nsp	00MFS10100350	FUSE	# 1A 250V UL,CSA,MITI TYPE FBT
5201	▲ F811	/N1G	00MFS10100850	00MFS10100850	FUSE	# 1A 250V BS LISTED
5201	▲ F811	/N1S	00MFS10100850	00MFS10100850	FUSE	# 1A 250V BS LISTED
5201	▲ F811	/S1G	nsp	00MFS10100850	FUSE	# 1A 250V BS LISTED
5201	▲ F811	/U1G	nsp	00MFS10100350	FUSE	# 1A 250V UL,CSA,MITI TYPE FBT
5201	▲ F821	/F1N	nsp	00MFS10100350	FUSE	# 1A 250V UL,CSA,MITI TYPE FBT
5201	▲ F821	/L1G	nsp	00MFS10100350	FUSE	# 1A 250V UL,CSA,MITI TYPE FBT
5201	▲ F821	/N1G	00MFS10100850	00MFS10100850	FUSE	# 1A 250V BS LISTED
5201	▲ F821	/N1S	00MFS10100850	00MFS10100850	FUSE	# 1A 250V BS LISTED
5201	▲ F821	/S1G	nsp	00MFS10100850	FUSE	# 1A 250V BS LISTED
5201	▲ F821	/U1G	nsp	00MFS10100350	FUSE	# 1A 250V UL,CSA,MITI TYPE FBT
5201	▲ F851	/F1N	nsp	00MFS10100350	FUSE	# 1A 250V UL,CSA,MITI TYPE FBT
5201	▲ F851	/L1G	nsp	00MFS10100350	FUSE	# 1A 250V UL,CSA,MITI TYPE FBT
5201	▲ F851	/N1G	00MFS10100850	00MFS10100850	FUSE	# 1A 250V BS LISTED
5201	▲ F851	/N1S	00MFS10100850	00MFS10100850	FUSE	# 1A 250V BS LISTED
5201	▲ F851	/S1G	nsp	00MFS10100850	FUSE	# 1A 250V BS LISTED
5201	▲ F851	/U1G	nsp	00MFS10100350	FUSE	# 1A 250V UL,CSA,MITI TYPE FBT
5201	▲ F852	/F1N	nsp	00MFS10100350	FUSE	# 1A 250V UL,CSA,MITI TYPE FBT
5201	▲ F852	/L1G	nsp	00MFS10100350	FUSE	# 1A 250V UL,CSA,MITI TYPE FBT
5201	▲ F852	/N1G	00MFS10100850	00MFS10100850	FUSE	# 1A 250V BS LISTED
5201	▲ F852	/N1S	00MFS10100850	00MFS10100850	FUSE	# 1A 250V BS LISTED
5201	▲ F852	/S1G	nsp	00MFS10100850	FUSE	# 1A 250V BS LISTED
5201	▲ F852	/U1G	nsp	00MFS10100350	FUSE	# 1A 250V UL,CSA,MITI TYPE FBT
5201	▲ FH02	/L1G	nsp	00MFS20200200	FUSE	# T2.0A 250V TR5
5201	▲ FH02	/N1G	00MFS20200200	00MFS20200200	FUSE	# T2.0A 250V TR5
5201	▲ FH02	/N1S	00MFS20200200	00MFS20200200	FUSE	# T2.0A 250V TR5
5201	▲ FH02	/S1G	nsp	00MFS20200200	FUSE	# T2.0A 250V TR5
5201	▲ FH02	/U1G	nsp	00MFS20250200	FUSE	# T2.5A/250V TR5 NO.19372 (T
5201	▲ FY01	/F1N	nsp	00MFS10125350	FUSE	# 1.25A 125V UL,CSA,MITI

NOTE : “nsp” PARTS IS LISTED FOR REFERENCE ONLY, MARANTZ WILL NOT SUPPLY THESE PARTS.

P.C.B. NAME	POS. NO.	VERS. COLOR	PART NO. (FOR EUR)	PART NO. (MJI)	PART NAME	DESCRIPTION
5201	▲ FY01	/L1G	nsp	00MFS10125350	FUSE	# 1.25A 125V UL,CSA,MITI
5201	▲ FY01	/N1G	00MFS10125850	00MFS10125850	FUSE	# 1.25A 250V BS LISTED
5201	▲ FY01	/N1S	00MFS10125850	00MFS10125850	FUSE	# 1.25A 250V BS LISTED
5201	▲ FY01	/S1G	nsp	00MFS10125850	FUSE	# 1.25A 250V BS LISTED
5201	▲ FY01	/U1G	nsp	00MFS10125350	FUSE	# 1.25A 125V UL,CSA,MITI
5201	GH01		00MDF77103500	00MDF77103500	FILM CAP.	0.01UF M 250V AC
5201	JF51		00MYT02020890	00MYT02020890	TERMINAL	2P CINCH JACK
5201	JT01		00MYJ15000220	00MYJ15000220	OPT. CONNECTOR	TOTX179L TOSLINK TRANSCEIVER
5201	JT02		00MYT02010790	00MYT02010790	TERMINAL	14X14 RA 1L1P BLK AU FLM-GND
5201	LF51		00MFC90050130	00MFC90050130	FERRITE CORE	BL02RN2-R62T2 FERRITE BEAD
5201	LT01		00MTP41042030	00MTP41042030	TRANSF.	PULSE TRNSF.(TPS247MN-0386AN)
5201	LT02		00MFC90050130	00MFC90050130	FERRITE CORE	BL02RN2-R62T2 FERRITE BEAD
5201	LT03		00MFC90050130	00MFC90050130	FERRITE CORE	BL02RN2-R62T2 FERRITE BEAD
5201	LT04		00MFC90050130	00MFC90050130	FERRITE CORE	BL02RN2-R62T2 FERRITE BEAD
5201	▲ Q801		00MHC3190532F	00MHC3190532F	IC	! PQO5RD21 5V 2A
5201	Q811		00MHC3890809F	00MHC3890809F	IC	+8V 1A REGULATOR NJM7808FA
5201	Q821		00MHC3891209F	00MHC3891209F	IC	NJM7812FA +12V
5201	Q822		00MHC3891209F	00MHC3891209F	IC	NJM7812FA +12V
5201	Q823		00MHT418622A0	00MHT418622A0	TRANSISTOR	2SD1862 TV-2 NPN Q,R
5201	Q824		00MHT30001000	00MHT30001000	TRANSISTOR	C2458,C1740S,C3199,ETC.
5201	Q831		00MHC3890809F	00MHC3890809F	IC	+8V 1A REGULATOR NJM7808FA
5201	Q851		00MHF202461C0	00MHF202461C0	F.E.T.	2SK246 (GR)
5201	Q852		00MHT41415100	00MHT41415100	TRANSISTOR	TRANSISTOR 2SD1415
5201	Q853		00MHT322402A0	00MHT322402A0	TRANSISTOR	2SC2240 GR OR BL TOSHIBA
5201	Q855		00MHF202461C0	00MHF202461C0	F.E.T.	2SK246 (GR)
5201	Q856		00MHT21020100	00MHT21020100	TRANSISTOR	2SB1020
5201	Q857		00MHT109702A0	00MHT109702A0	TRANSISTOR	2SA970 (GR) OR (BL) TOSHIBA
5201	QF51		00MHT10001000	00MHT10001000	TRANSISTOR	A1048,A933S,A1267,ETC.
5201	QF52		00MHT30001000	00MHT30001000	TRANSISTOR	C2458,C1740S,C3199,ETC.
5201	QN01		00MHT30001000	00MHT30001000	TRANSISTOR	C2458,C1740S,C3199,ETC.
5201	QN06		00MHT30001000	00MHT30001000	TRANSISTOR	C2458,C1740S,C3199,ETC.
5201	QT01		00MHC700400U0	00MHC700400U0	IC	LC74HCU04
5201	R821		nsp	00MGD05272160	RESISTOR	2.7K OHM +- 5% 1/6W
5201	R822		nsp	00MGD05103160	RESISTOR	10K OHM +- 5% 1/6W
5201	RF51		nsp	00MGD05220160	RESISTOR	22 OHM +- 5% 1/6W
5201	RF52		nsp	00MGD05472160	RESISTOR	4.7K OHM +- 5% 1/6W
5201	RF53		nsp	00MGD05472160	RESISTOR	4.7K OHM +- 5% 1/6W
5201	RF54		nsp	00MGD05473160	RESISTOR	47K OHM +- 5% 1/6W
5201	RF55		nsp	00MGD05183160	RESISTOR	18K OHM +- 5% 1/6W
5201	RF56		nsp	00MGD05472160	RESISTOR	4.7K OHM +- 5% 1/6W
5201	RF57		nsp	00MGD05101160	RESISTOR	100 OHM +- 5% 1/6W
5201	RF58		nsp	00MGD05822160	RESISTOR	8.2K OHM +- 5% 1/6W
5201	RN01		nsp	00MGD05153160	RESISTOR	15K OHM +- 5% 1/6W
5201	RN02		nsp	00MGD05103160	RESISTOR	10K OHM +- 5% 1/6W
5201	RN06		nsp	00MGD05122160	RESISTOR	1.2K OHM +- 5% 1/6W
5201	RN09		nsp	00MGD05473160	RESISTOR	47K OHM +- 5% 1/6W
5201	RN10		nsp	00MGD05225160	RESISTOR	2.2M OHM +- 5% 1/6W
5201	RT01		nsp	00MGD05101160	RESISTOR	100 OHM +- 5% 1/6W
5201	RT02		nsp	00MGD05330160	RESISTOR	33 OHM +- 5% 1/6W
5201	RT03		nsp	00MGD05750160	RESISTOR	75 OHM +- 5% 1/6W
5201	RT04		nsp	00MGD05220160	RESISTOR	22 OHM +- 5% 1/6W
5201	RT05		nsp	00MGD05122160	RESISTOR	1.2K OHM +- 5% 1/6W
5201	RT06		nsp	00MGD05104160	RESISTOR	100K OHM +- 5% 1/6W
5201	SF51		00MSS02021150	00MSS02021150	SLIDE SWITCH	SLIDE SWITCH INT/EXT
5201	▲ SH01		00MSP01011990	00MSP01011990	PUSH SWITCH	! SDDLD1 POWER SWITCH TV-3

NOTE : “nsp” PARTS IS LISTED FOR REFERENCE ONLY, MARANTZ WILL NOT SUPPLY THESE PARTS.

Personal notes:

Mecha Loader and Mecha Traverse

Super Audio CD Player : SA-11S1

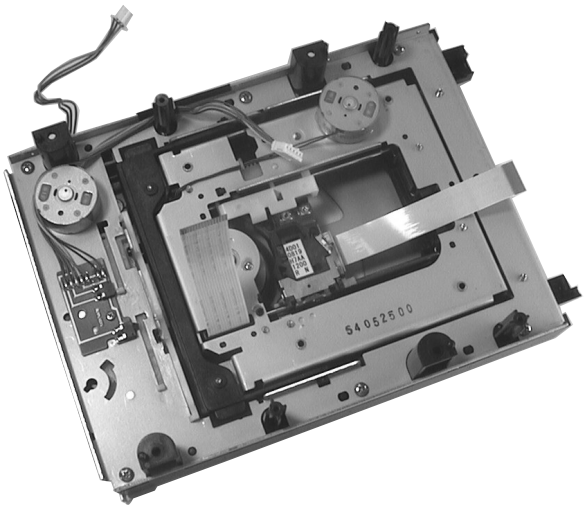

TABLE OF CONTENTS

SECTION 2 **PAGE**

MECHA LOADER AND MECHA TRAVERSE

1. EXPLODED VIEW AND PARTS LIST 2-1

1. EXPLODED VIEW AND PARTS LIST

P.C.B. NAME	POS. NO.	VERS. COLOR	PART NO. (FOR EUR)	PART NO. (MJI)	PART NAME	DESCRIPTION	
	1		nsp	nsp	CHASSIS	MAIN CHASSIS ASSY	9KC 1A01 7
	2		90M13AK160210	90M13AK160210	BRAKET	CLAMPER BRACKET	9KA 7P08 5
	3		nsp	nsp	BRAKET	GUIDE CLAMP BRACKET	
	4		90M-MM001290R	90M-MM001290R	MOTOR	LOADING MOTOR ASSY	9KC 2A00 3
	5		90M13AK058230	90M13AK058230	GEAR	LOADING GEAR	9KC 2G02 9
	6		90M13AK058210	90M13AK058210	GEAR	LOADING GEAR 2ND	9KB 9G03 0
	7		90M13AK058220	90M13AK058220	GEAR	LOADING GEAR 3RD	9KB 9G03 1
	8		90M13AK105210	90M13AK105210	CHASSIS	SUB CHASSIS-L	9KA 2G41 7
	9		90M13AK105220	90M13AK105220	CHASSIS	SUB CHASSIS-R	9KA 2G41 8
	10		90M13AK163210	90M13AK163210	TRAY	TRAY-D4	9KA 2G778
	11		90M13AK054210	90M13AK054210	CAM	SLIDE-CAM	9KC 1G00 3
	12		90M13AK002210	90M13AK002210	ARM	TRAVERSE ARM	9KC 1G00 4
	14		90M13AK005210	90M13AK005210	CLAMPER	CLAMPER H	9KA 7G20 2
	15		90M13AK005220	90M13AK005220	CLAMPER	CLAMPER L	9KA 7G20 3
	16		90M13AK264210	90M13AK264210	BELT	LOADING BELT	9KB 9G01 5
	17		nsp	nsp	PCB ASSY	SWITCH P.W.B.	9KC 1P01 4
	18		nsp	nsp	CORD	5P PH WIRE	9KC 2G04 3
	19		90M-SP001260R	90M-SP001260R	SWITCH	SWITCH ESE22MH21	9KS 01W2 04
	20		90M-SP001270R	90M-SP001270R	SWITCH	SWITCH ESE22MH23	9KS 01W2 05
	21		90M13AK012210	90M13AK012210	WASHER	POLY.SLIT WASHER 2.6X6X0.25C	9KP 26C6 25
	22		nsp	nsp	CLAMPER	WIRE CLAMPER	445 8004 007
	23		nsp	nsp	SCREW	PRECISION SCREW 1.7X2.2 TYPE3	9KS 17N0 22
	24		nsp	nsp	SCREW	SCREW 2.6X6 CBTS(B)-Z	9KB 26BK 06
	25		nsp	nsp	SCREW	PRECISION SCREW 2X3(S) TYPE3	9KS 20TK 33
	26		nsp	nsp	SCREW	SCREW 2X6 CBTS(P)-Z	9KB 20PK 06
	27A		90M13AK304210	90M13AK304210	MECHANISM	TRAVERSE MECHA (FEED) ASSY	9KC 2A06 3A
	23		nsp	nsp	SCREW	PRECISION SCREW 1.7X2.2 TYPE3	
	27		nsp	nsp	CHASSIS	PU CHASSIS ASSY	
	28		nsp	nsp	HOLDER	SHAFT HOLDER L	
	29		nsp	nsp	HOLDER	SHAFT HOLDER R	
	30		nsp	nsp	BRAKET	SHAFT TILT BASE	
	31		nsp	nsp	RETAINER	SHAFT TILT PLATE	
	32		nsp	nsp	SPRING	TILT SPRING	
	33		nsp	nsp	SHAFT	MAIN SHAFT	
	34		nsp	nsp	SHAFT	SUB SHAFT	
	35		nsp	nsp	GEAR	PU RACK GEAR	
	37		nsp	nsp	MECHANISM	PICK UP HOP-1200R	
	38		nsp	nsp	SPRING	PU SPRING	
	39		nsp	nsp	SPRING	SHAFT SPRING	
	40		nsp	nsp	SPRING	RACK GEAR SPRING	
	42		nsp	nsp	MOTOR	T/T MOTOR ASSY	
	43		nsp	nsp	SCREW	SCREW 2.6X6 CBTS(S)-Z	
	44		nsp	nsp	SCREW	SCREW 2.6X4 CBTS(S)-Z	
	46		nsp	nsp	SCREW	SCREW 2.6X15 CFTS(S)-Z	
	47		nsp	nsp	SCREW	SCREW 3X4 BSS	
	48		nsp	nsp	SCREW	SCREW 3X8 BSS (A)	
	63		nsp	nsp	SCREW	PRECISION SCREW 1.7X5 TYPE3	
	23		nsp	nsp	SCREW	PRECISION SCREW 1.7X2.2 TYPE3	
	36		nsp	nsp	GEAR	FEED GEAR 2ND ASSY	
	41		nsp	nsp	MOTOR	FEED MOTOR ASSY	
	50		nsp	nsp	WASHER	POLY.SLIT WASHER 2.1X4X0.25C	
	53		nsp	nsp	GEAR	FEED GEAR 3RD	
	49		90M13AK130210	90M13AK130210	DAMPER	DAMPER-SI25-LB	9KA 2G643
	51		nsp	nsp	SCREW	SPECIAL SCREW (FRONT)	
	52		nsp	nsp	SCREW	SPECIAL SCREW (REAR)	
	54		90M13AK116210	90M13AK116210	LEAF SPRING	TRAY-SPRING-VXF	9KB 7P02 4
	60		90M13AK104210	90M13AK104210	RETAINER	PLATE-RE-2HPC	9KC 2P03 1
	61		90M13AK104220	90M13AK104220	RETAINER	WF-PLATE-RE-2HPC	9KC 2P03 2
	62		nsp	nsp	SCREW	PRECISION SCREW 2X4(P) TYPE1	9KS 20P1 04
	64		nsp	nsp	CUSHION	RUBBER CUSHION	9KC 1G04 2
	66		90M-YU001350R	90M-YU001350R	FFC	FFC-0.5-24 L=80	9KA 2P70 6
	68		nsp	nsp	TAPE	TAPE W10X45 (NITTO NO.156)	
	70		nsp	nsp	CUSHION	CUSHION L 6X3Xt4	9KC 2G07 6
	71		nsp	nsp	CUSHION	CUSHION R 6X3Xt2	9KC 2G07 7

NOTE : “nsp” PARTS IS LISTED FOR REFERENCE ONLY, MARANTZ WILL NOT SUPPLY THESE PARTS.

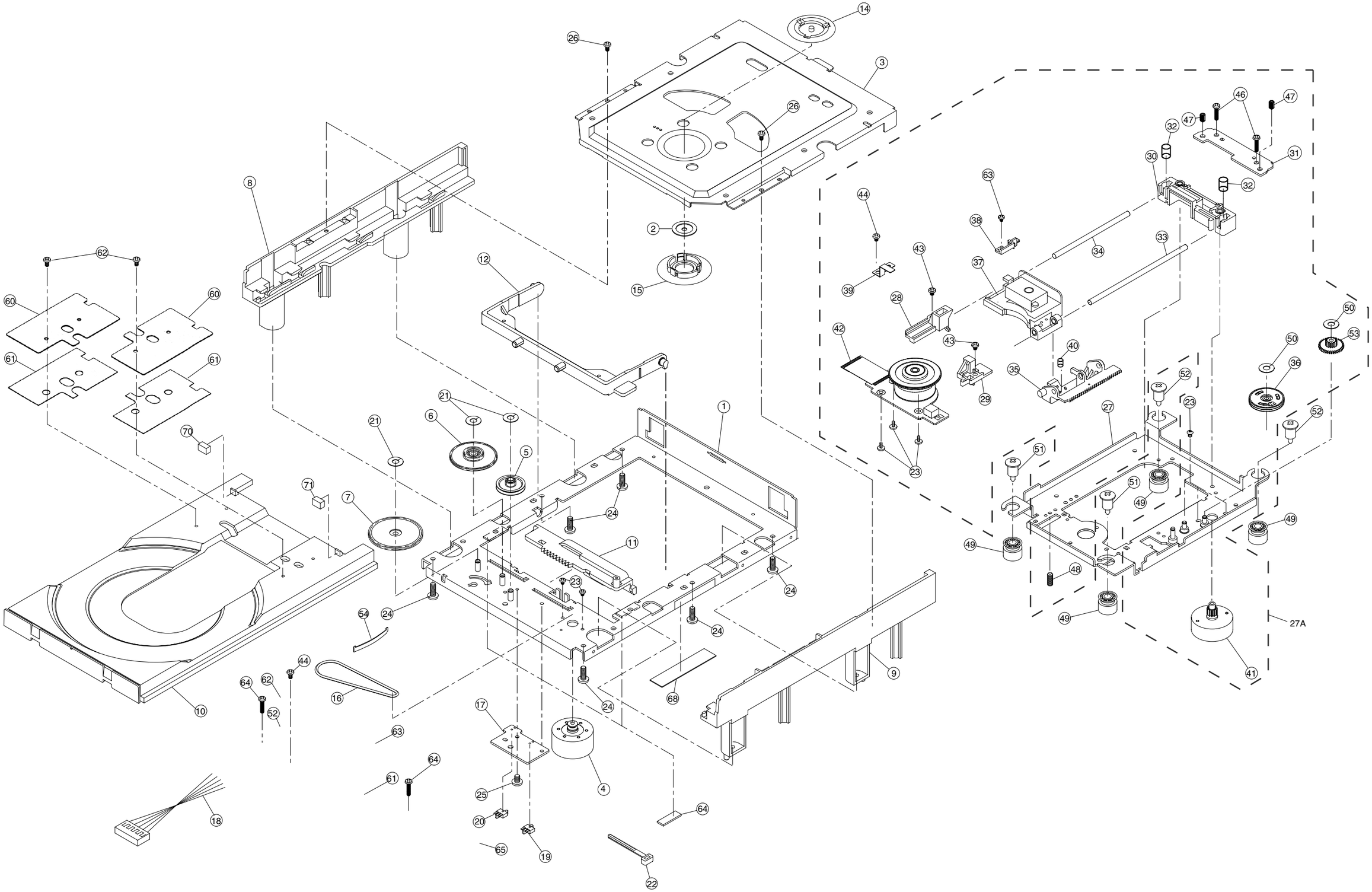
1
2
3
4
5
6
7
8
9
10
11
12
14
15
16
17
18
19
20
21
22
23
24
25
26
27
27A
28
29
30
31
32
33
34
35
36
37
38
39
40
41
42
43
44
46
47
48
49
50
51
52
53
54
60
61
62
63
64
65
68
70
71

Personal notes:

Super Audio CD PCB Module

Super Audio CD Player : SA-11S1

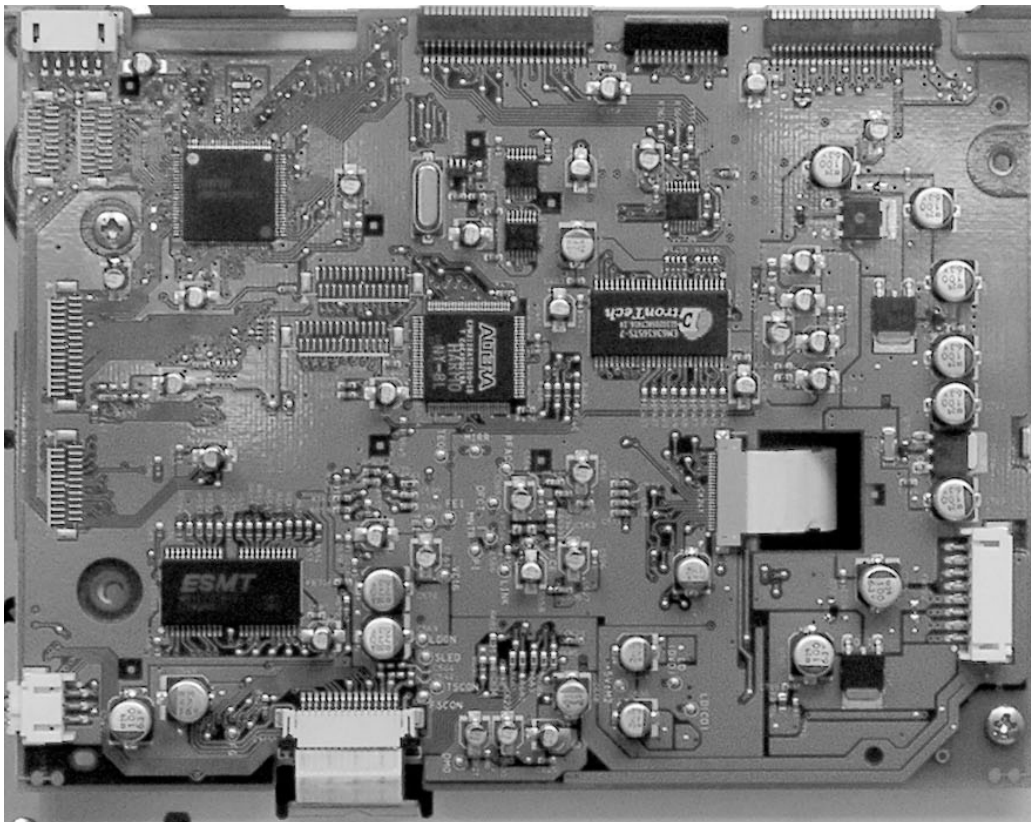

TABLE OF CONTENTS

SECTION 3 **PAGE**

SUPER AUDIO CD PCB MODULE

1. IC DATA 3-1
2. BLOCK DIAGRAM 3-22
3. SCHEMATIC DIAGRAM 3-23
4. PARTS LOCATION 3-29
5. ELECTRICAL PARTS LIST 3-30

1. IC DATA

IC502: CXD1885Q

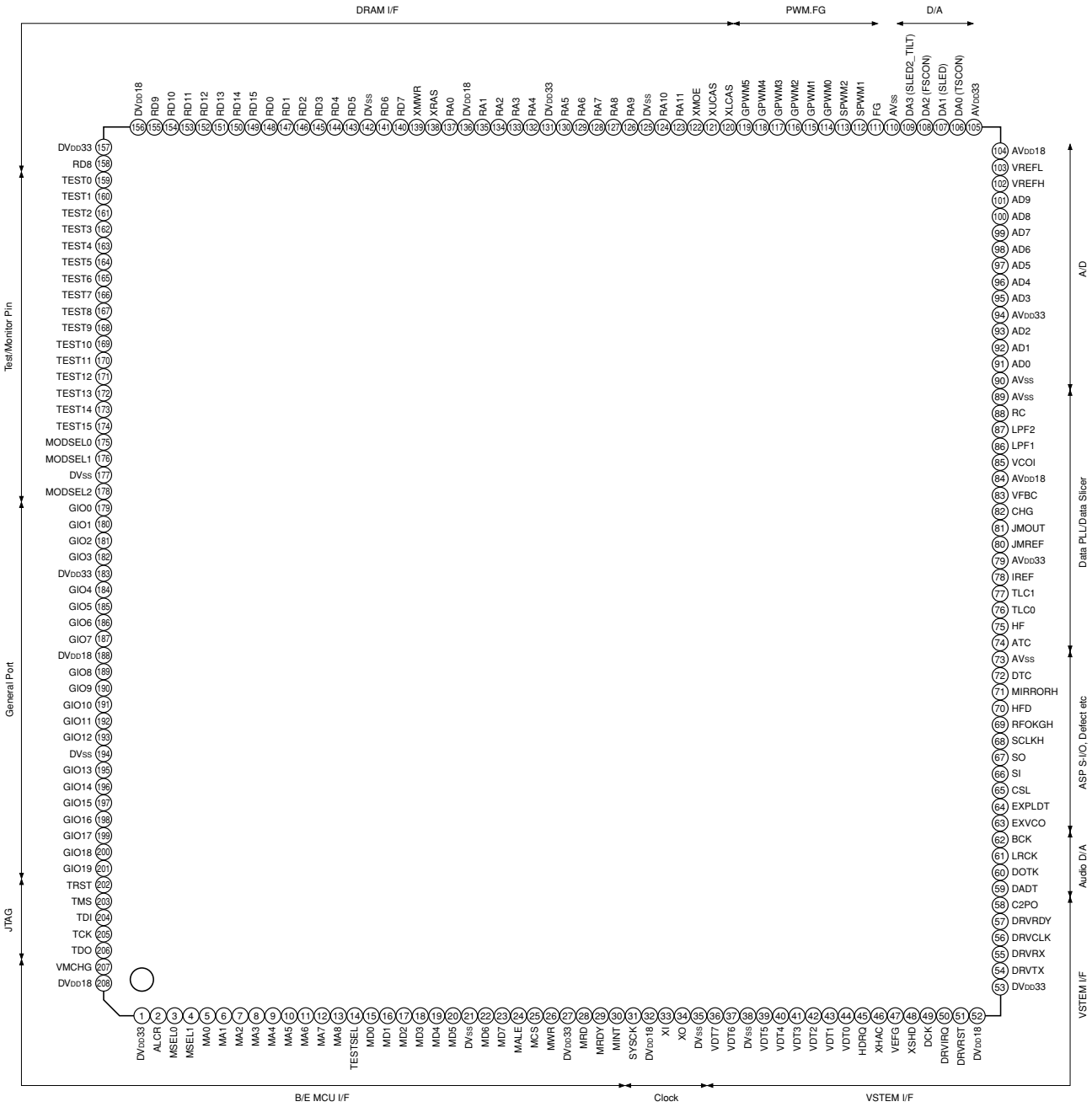

IC502: CXD1885Q

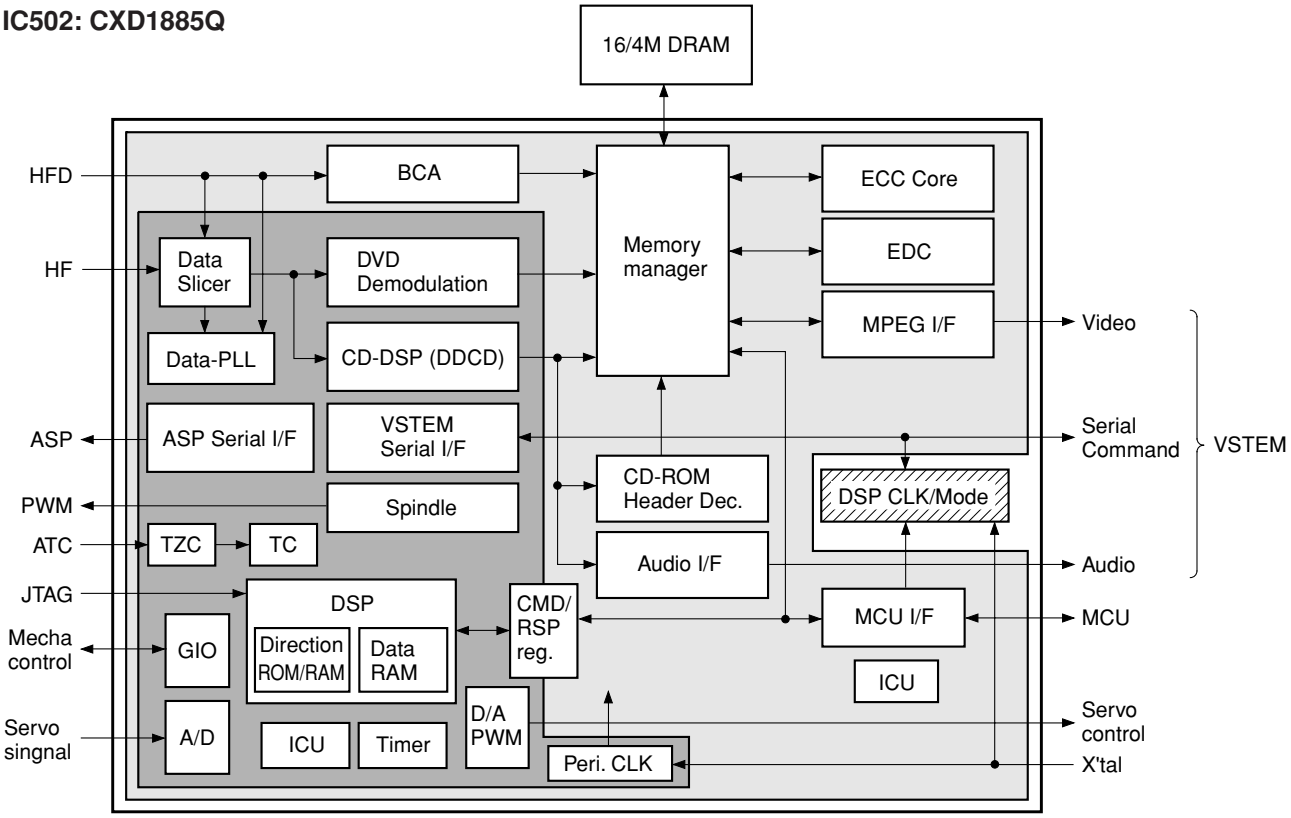

(A/D : Analog/Digital, PU : Pull-up, PD : Pull-down, SMT=Schumitt)

No.	Terminal Name	I/O	A/D	Classification	Function	PU	PD	SMT
1	DVDD33	P		VDD & GND	Digital 3.3V Power for I/O.			
2	ALCR	I	D	MCU I/F	Chip select input. (L: Reset)	*		*
3	MSEL0	I	D	MCU I/F	MCU I/F mode select 0.			*
4	MSEL1	I	D	MCU I/F	MCU I/F mode select 1.			*
5	MA0	I/O	D	MCU I/F	MCU Address input 0 / data I/O 0 <LSB>.			*
6	MA1	I/O	D	MCU I/F	MCU Address input 1 / data I/O 1.			*
7	MA2	I/O	D	MCU I/F	MCU Address input 2 / data I/O 2.			*
8	MA3	I/O	D	MCU I/F	MCU Address input 3 / data I/O 3.			*
9	MA4	I/O	D	MCU I/F	MCU Address input 4 / data I/O 4.			*
10	MA5	I/O	D	MCU I/F	MCU Address input 5 / data I/O 5.			*
11	MA6	I/O	D	MCU I/F	MCU Address input 6 / data I/O 6.			*
12	MA7	I/O	D	MCU I/F	MCU Address input 7 / data I/O 7.			*
13	MA8	I	D	MCU I/F	MCU Address input 8 <MSB>.			*
14	TESTSEL	I	D	MCU I/F	TEST Select input.			*
15	MD0	I/O	D	MCU I/F	MCU data I/O 0 <LSB>.			*
16	MD1	I/O	D	MCU I/F	MCU data I/O 1.			*
17	MD2	I/O	D	MCU I/F	MCU data I/O 2.			*
18	MD3	I/O	D	MCU I/F	MCU data I/O 3.			*
19	MD4	I/O	D	MCU I/F	MCU data I/O 4.			*
20	MD5	I/O	D	MCU I/F	MCU data I/O 5.			*
21	DVSS	P		VDD & GND	Digital Ground.			
22	MD6	I/O	D	MCU I/F	MCU data I/O 6.			*
23	MD7	I/O	D	MCU I/F	MCU data I/O 7 <MSB>.			*
24	MALE	I	D	MCU I/F	MCU Address latch signal input.			*
25	MCS	I	D	MCU I/F	MCU Chip Select signal input.			*
26	MWR	I	D	MCU I/F	MCU Write strobe signal.			*
27	DVDD33	P		VDD & GND	digital 3.3V Power. (for I/O)			
28	MRD	I	D	MCU I/F	MCU Read Strobe signal.			*
29	MRDY	O	D	MCU I/F	MCU Ready signal. (L: Wait)			
30	MINT	O	D	MCU I/F	MCU Interrupt signal. (L: Interrupt request)			
31	SYSCK	O	D	Clock	Clock Monitor output.			
32	DVDD18	P		VDD & GND	Digital 1.8V Power. (Internal logic system power)			
33	XI	I	D	Clock	Crystal oscillation input.			
34	XO	O	D	Clock	Crystal oscillation output.			
35	DVSS	P		VDD & GND	Digital Ground.			
36	VDT7	O	D	VSTEM A/V	MPEG data output 7.			
37	VTD6	O	D	VSTEM A/V	MPEG data output 6.			

IC502: CXD1885Q

No.	Terminal Name	I/O	A/D	Classification	Function	PU	PD	SMT
38	DVSS	P		VDD & GND	Digital Ground.			
39	VDT5	O	D	VSTEM A/V	MPEG data output 5.			
40	VDT4	O	D	VSTEM A/V	MPEG data output 4.			
41	VDT3	O	D	VSTEM A/V	MPEG data output 3.			
42	VDT2	O	D	VSTEM A/V	MPEG data output 2.			
43	VDT1	O	D	VSTEM A/V	MPEG data output 1.			
44	VDT0	O	D	VSTEM A/V	MPEG data output 0.			
45	HDRQ	I	D	VSTEM A/V	MPEG data Request input.	*		
46	XHAC	O	D	VSTEM A/V	Data Valid output.			
47	VEFG	O	D	VSTEM A/V	ECC Error-sector Flag output. (L: error sector)			
48	XSHD	O	D	VSTEM A/V	DVD Sector Head Flag output.			
49	DCK	O	D	VSTEM A/V	Data Strobe output.			
50	DRVIRQ	O	D	VSTEM Command	Interrupt Request output for Host. (L: interruption is demanded)			
51	DRVRST	I	D	VSTEM Command	Drive H/W Reset input. (L: reset)	*		*
52	DVDD18	P		VDD & GND	Digital 1.8V power for Internal logic system.			
53	DVDD33	P		VDD & GND	Digital 3.3V Power for I/O.			
54	DRVTX	O	D	VSTEM Command	Transmitting serial data output to Host.			
55	DRVRX	I	D	VSTEM Command	Reception serial data input from Host.			
56	DRVCLK	I	D	VSTEM Command	Clock input from Host.			*
57	DRVRDY	O	D	VSTEM Command	Drive Ready signal output. (L: ready)			
58	C2PO	O	D	Audio I/F	CD-DSP C2 Pointer output.			
59	DADT	O	D	Audio I/F	Audio serial data output.			
60	DOTX	O	D	Audio I/F	Digital audio output.			
61	LRCK	O	D	Audio I/F	L/R Clock output.			
62	BCK	O	D	Audio I/F	Audio Bit Clock output.			
63	EXVCO	I	D	TEST/Monitor	External Channel clock input.			
64	EXPLDT	I	D	TEST/Monitor	External RF data input. (Logic level)			
65	CSL	O	D	ASP I/F	SIO for RF signal processing LSI control. Latch signal output.			
66	SI	I	D	ASP I/F	SIO for RF signal processing LSI control. Serial data input.			
67	SO	O	D	ASP I/F	SIO for RF signal processing LSI control. Serial data output.			
68	SCLKH	O	D	ASP I/F	SIO for RF signal processing LSI control. Serial clock output.			
69	RFOKGH	I	D	ASP I/F	RF O.K. Signal input.			*
70	HFD	I	D	ASP I/F	RF lack Signal input.			*
71	MIRRORH	I	D	ASP I/F	Mirror detected signal input.(H: Mirror detected)			*
72	DTC	I	D	ASP I/F	Track cross signal input. (Logic level input)			*
73	AVSS	P		VDD & GND	Analog Ground.			
74	ATC	I	A	Data PLL	Track Cross signal input. (Analog level input)			
75	HF	I	A	Data PLL	RF signal input.			
76	TLC0	O	A	Data PLL	Asymmetry Charge-pump output 0.			
77	TLC1	O	A	Data PLL	Asymmetry Charge-pump output 1			
78	IREF	I	A	Data PLL	Reference current setting terminal for Asymmetry Circuit.			
79	AVDD33	P		VDD & GND	Analog 3.3V Power.			
80	JMREF	I	A	Data PLL	Reference current setting terminal for Jitter Monitor			
81	JMOUT	O	A	Data PLL	Jitter Monitor output.			
82	CHG	I	A	Data PLL	Reference current setting terminal for data PLL.			
83	VFBC	I	A	Data PLL	VCO offset frequency setting terminal for data PLL.			
84	AVDD18	P		VDD & GND	Analog 1.8V Power.			
85	VCOI	I	A	Data PLL	VCO Control voltage input terminal for data PLL.			
86	LPF1	O	A	Data PLL	VCO Loop-filter connection terminal 1 for data PLL.			
87	LPF2	O	A	Data PLL	VCO Loop-filter connection terminal 2 for data PLL			
88	RC	I	A	Data PLL	VCO gain setting terminal for data PLL.			
89	AVSS	P		VDD & GND	Analog Ground.			
90	AVSS	P		VDD & GND	Analog Ground.			
91	AD0	I	A	ADC	AD0 Input.			
92	AD1	I	A	ADC	AD1 Input.			
93	AD2	I	A	ADC	AD2 Input.			
94	AVDD33	P		VDD & GND	Analog 3.3V Power.			
95	AD3	I	A	ADC	AD3 Input.			
96	AD4	I	A	ADC	AD4 Input.			
97	AD5	I	A	ADC	AD5 Input.			
98	AD6	I	A	ADC	AD6 Input.			
99	AD7	I	A	ADC	AD7 Input.			
100	AD8	I	A	ADC	AD8 Input.			
101	AD9	I	A	ADC	AD9 Input.			

IC502: CXD1885Q

No.	Terminal Name	I/O	A/D	Classification	Function	PU	PD	SMT
102	VREFH	I/O	A	ADC	Max Reference Voltage input for ADC. (Internal Reference Voltage mode, it will be an output state)			
103	VREFL	I/O	A	ADC	Min Reference Voltage input for ADC. (Internal Reference Voltage mode, it will be an output state)			
104	AVDD18	P		VDD & GND	Analog 1.8V Power.			
105	AVDD33	P		VDD & GND	Analog 3.3V Power.			
106	DA0 (TSCON)	O	A	DAC	DA0 output. (Track Servo output)			
107	DA1 (SLED)	O	A	DAC	DA1 output. (Sled Servo output)			
108	DA2 (FSCON)	O	A	DAC	DA2 output. (Focus Servo output)			
109	DA3 (SLED2_TILT	O	A	DAC	DA3 output. (Sled Servo / Tilt Servo output)			
110	AVSS	P		VDD & GND	Analog Ground			
111	FG	I	D	SPM	FG signal input.			*
112	SPWM1	O	D	SPM	Spindle motor PWM output 1.			
113	SPWM2	O	D	SPM	Spindle motor PWM output 2.			
114	GPWM0	O	D	General PWM	Multi-purpose PWM output 0.			
115	GPWM1	O	D	General PWM	Multi-purpose PWM output 1.			
116	GPWM2	O	D	General PWM	Multi-purpose PWM output 2.			
117	GPWM3	O	D	General PWM	Multi-purpose PWM output 3.			
118	GPWM4	O	D	General PWM	Multi-purpose PWM output 4.			
119	GPWM5	O	D	General PWM	Multi-purpose PWM output 5.			
120	XLCAS	O	D	DRAM I/F	DRAM LCAS output. (Low-Byte row address strobe output)			
121	XUCAS	O	D	DRAM I/F	DRAM UCAS output. (Upper-Byte row address strobe output)			
122	XMOE	O	D	DRAM I/F	DRAM output enable.			
123	RA11	O	D	DRAM I/F	DRAM address output terminal 11.			
124	RA10	O	D	DRAM I/F	DRAM address output terminal 10.			
125	DVSS	P		VDD & GND	Digital Ground.			
126	RA9	O	D	DRAM I/F	DRAM address output terminal 9.			
127	RA8	O	D	DRAM I/F	DRAM address output terminal 8.			
128	RA7	O	D	DRAM I/F	DRAM address output terminal 7.			
129	RA6	O	D	DRAM I/F	DRAM address output terminal 6.			
130	RA5	O	D	DRAM I/F	DRAM address output terminal 5.			
131	DVDD33	P		VDD & GND	Digital 3.3V Power. (for I/O)			
132	RA4	O	D	DRAM I/F	DRAM address output terminal 4.			
133	RA3	O	D	DRAM I/F	DRAM address output terminal 3.			
134	RA2	O	D	DRAM I/F	DRAM address output terminal 2.			
135	RA1	O	D	DRAM I/F	DRAM address output terminal 1.			
136	DVDD18	P		VDD & GND	Digital 1.8V Power. (for Internal Logic power)			
137	RA0	O	D	DRAM I/F	DRAM address output terminal 0.			
138	XRAS	O	D	DRAM I/F	DRAM RAS output. (Column address strobe output)			
139	XMWR	O	D	DRAM I/F	DRAM Write enable.			
140	RD7	I/O	D	DRAM I/F	DRAM data input/output terminal 7.	*		
141	RD6	I/O	D	DRAM I/F	DRAM data input/output terminal 6.	*		
142	DVSS	P		VDD & GND	Digital Ground.			
143	RD5	I/O	D	DRAM I/F	DRAM data input/output terminal 5.	*		
144	RD4	I/O	D	DRAM I/F	DRAM data input/output terminal 4.	*		
145	RD3	I/O	D	DRAM I/F	DRAM data input/output terminal 3.	*		
146	RD2	I/O	D	DRAM I/F	DRAM data input/output terminal 2.	*		
147	RD1	I/O	D	DRAM I/F	DRAM data input/output terminal 1.	*		
148	RD0	I/O	D	DRAM I/F	DRAM data input/output terminal 0.	*		
149	RD15	I/O	D	DRAM I/F	DRAM data input/output terminal 15.	*		
150	RD14	I/O	D	DRAM I/F	DRAM data input/output terminal 14.	*		
151	RD13	I/O	D	DRAM I/F	DRAM data input/output terminal 13.	*		
152	RD12	I/O	D	DRAM I/F	DRAM data input/output terminal 12.	*		
153	RD11	I/O	D	DRAM I/F	DRAM data input/output terminal 11.	*		
154	RD10	I/O	D	DRAM I/F	DRAM data input/output terminal 10.	*		
155	RD9	I/O	D	DRAM I/F	DRAM data input/output terminal 9.	*		
156	DVDD18	P		VDD & GND	Digital 1.8V Power. (for internal Logic system)			
157	DVDD33	P		VDD & GND	Digital 3.3V power for I/O.			
158	RD8	I/O	D	DRAM I/F	DRAM data input/output terminal 8.	*		
159	TEST0	O	D	TEST/Monitor	TEST I/O 0.			
160	TEST1	O	D	TEST/Monitor	TEST I/O 1.			
161	TEST2	O	D	TEST/Monitor	TEST I/O 2.			
162	TEST3	O	D	TEST/Monitor	TEST I/O 3.			
163	TEST4	O	D	TEST/Monitor	TEST I/O 4.			

IC502: CXD1885Q

No.	Terminal Name	I/O	A/D	Classification	Function	PU	PD	SMT
164	TEST5	O	D	TEST/Monitor	TEST I/O 5.			
165	TEST6	O	D	TEST/Monitor	TEST I/O 6.			
166	TEST7	O	D	TEST/Monitor	TEST I/O 7.			
167	TEST8	O	D	TEST/Monitor	TEST I/O 8.			
168	TEST9	O	D	TEST/Monitor	TEST I/O 9.			
169	TEST10	O	D	TEST/Monitor	TEST I/O 10.			
170	TEST11	O	D	TEST/Monitor	TEST I/O 11.			
171	TEST12	O	D	TEST/Monitor	TEST I/O 12.			
172	TEST13	O	D	TEST/Monitor	TEST I/O 13.			
173	TEST14	O	D	TEST/Monitor	TEST I/O 14.			
174	TEST15	O	D	TEST/Monitor	TEST I/O 15.			
175	MODSEL0	I	D	TEST/Monitor	TEST mode select 0. (GND, under normal conditions)			
176	MODSEL1	I	D	TEST/Monitor	TEST mode select 1. (GND, under normal conditions)			
177	DVSS	P		VDD & GND	Digital Ground.			
178	MODSEL2	I	D	TEST/Monitor	TEST mode select 2. (GND, under normal conditions)			
179	GIO0	I/O	D	Multi-purpose	Multi-purpose port 0.		*	*
180	GIO1	I/O	D	Multi-purpose	Multi-purpose port 1.		*	*
181	GIO2	I/O	D	Multi-purpose	Multi-purpose port 2.		*	*
182	GIO3	I/O	D	Multi-purpose	Multi-purpose port 3.		*	*
183	DVDD33	P		VDD & GND	Digital 3.3V Power for I/O.			
184	GIO4	I/O	D	General Port	Multi-purpose port 4.		*	*
185	GIO5	I/O	D	General Port	Multi-purpose port 5.		*	*
186	GIO6	I/O	D	General Port	Multi-purpose port 6.		*	*
187	GIO7	I/O	D	General Port	Multi-purpose port 7.		*	*
188	DVDD18	P		VDD & GND	Digital 1.8V Power for I/O. (for internal Logic system)			
189	GIO8	I/O	D	General Port	Multi-purpose port 8.		*	*
190	GIO9	I/O	D	General Port	Multi-purpose port 9.	*	*	*
191	GIO10	I/O	D	General Port	Multi-purpose port 10.		*	*
192	GIO11	I/O	D	General Port	Multi-purpose port 11.		*	*
193	GIO12	I/O	D	General Port	Multi-purpose port 12.	*	*	*
194	DVSS	P		VDD & GND	Digital Ground.			
195	GIO13	I/O	D	Multi-purpose	Multi-purpose port 13.	*	*	*
196	GIO14	I/O	D	General Port	Multi-purpose port 14.	*	*	*
197	GIO15	I/O	D	General Port	Multi-purpose port 15.	*	*	*
198	GIO16	I/O	D	General Port	Multi-purpose port 16.		*	*
199	GIO17	I/O	D	General Port	Multi-purpose port 17.		*	*
200	GIO18	I/O	D	General Port	Multi-purpose port 18.		*	*
201	GIO19	I/O	D	General Port	Multi-purpose port 19.		*	*
202	TRST	I	D	JTAG I/F	JTAG Reset input.		*	*
203	TMS	I	D	JTAG I/F	JTAG Mode Select input.	*		*
204	TDI	I	D	JTAG I/F	JTAG Data Input.	*		*
205	TCK	I	D	JTAG I/F	JTAG Clock input.	*		
206	TDO	O	D	JTAG I/F	JTAG Data output.			
207	VMCHG	I	D	MCU I/F	VSTEM / external MCU access selection terminal of system setting register for DSP. (L: VSTEM, H: external MCU)			
208	DVDD18	P		VDD & GND	Digital 1.8V power for internal Logic system.			

IC401: CXD2753R

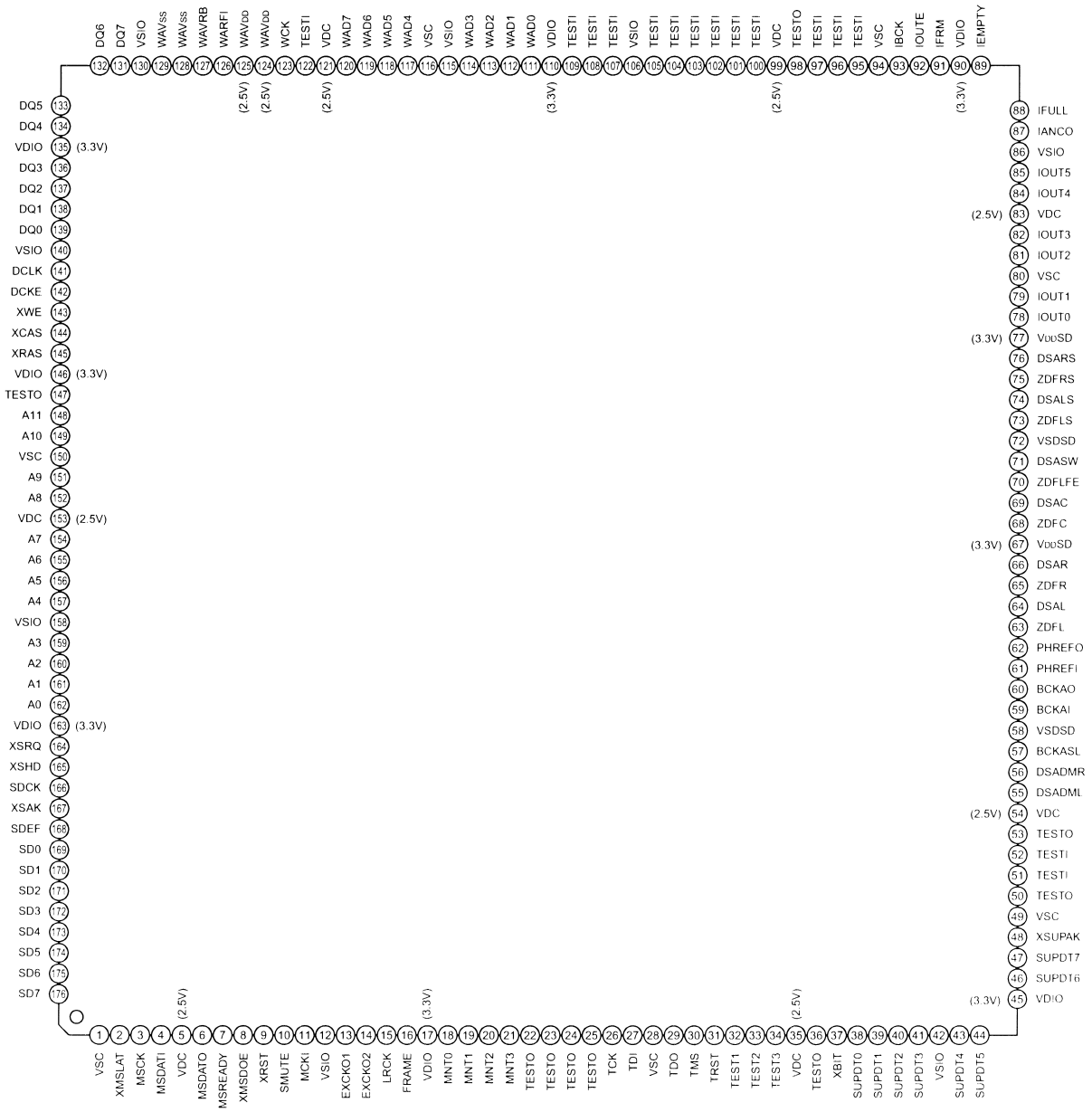

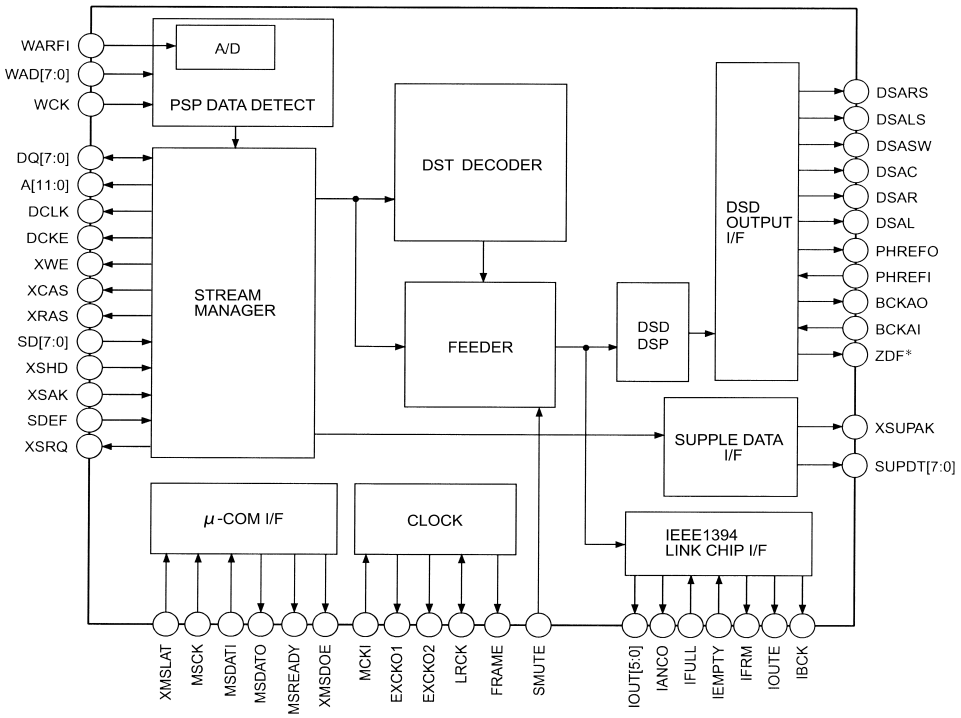

IC401: CXD2753R

No.	Pin Name	I/O	Functions
1	VSC	-	It fixed to ground.(for Core)
2	XMSLAT	I	Latch input for mCOM serial communication.
3	MSCK	I	Shift clock input for mCOM serial communication.
4	MSDATI	I	Data input for mCOM serial communication.
5	VDC	-	+2.5V Power for Core.
6	MSDATO	O	Data output for mCOM serial communication. "Hi-Z" potential except the output mode.
7	MSREADY	O	Completion flag of output preparation for mCOM serial communication. "L" is outputted at the time of completion.
8	XMSDOE	O	Output enable pin for mCOM serial communication. "L" is outputted at the time of MSDATO mode.
9	XRST	I	Reset pin. The whole IC is reset by at the time of "L" potential.
10	SMUTE	Ipd	Soft Mute. Soft mute of the audio output is carried out at the time of "H" potential.It releases at the time of "L" potential.
11	MCKI	I	Master Clock input.
12	VSIO	-	It fixed to Ground. Ground for I/O.
13	EXCKO1	O	External output Clock 1.
14	EXCKO2	O	External output Clock 2.
15	LRCK	O	44.1kHz, 1Fs Clock output.
16	FRAME	O	Frame signal output.
17	VDIO	-	+3.3V Power for I/O.
18	MNT0	O	Monitor output.
19	MNT1	O	Monitor output.
20	MNT2	O	Monitor output.
21	MNT3	O	Monitor output.
22	TESTO	O	Output terminal for a Test. (open)
23	TESTO	O	Output terminal for a Test.(open)
24	TESTO	O	Output terminal for a Test.(open)
25	TESTO	O	Output terminal for a Test.(open)
26	TCK	I	Clock input for a Test. It fixed to "L" potential.
27	TDI	Ipu	Input pin(pull-up) for a Test.(open)
28	VSC	-	It fixed to Ground. Ground for CORE.
29	TDO	O	Output for a Test.(open).
30	TMS	Ipu	Input pin(pull-up) for a Test.(open)
31	TRST	Ipu	Reset pin(pull-up) for a Test. Input the Power-on reset signal or fixed to "L" potential.
32	TEST1	I	Test input pin. It fixed to "L" potential.
33	TEST2	I	Test input pin. It fixed to "L" potential.
34	TEST3	I	Test input pin. It fixed to "L" potential.
35	VDC	-	+2.5V Power for CORE.
36	TESTO	O	Out put for TEST. It fixed to open.
37	XBIT	O	DST monitor.
38	SUPDT0	O	Supplementary data output. (LSB)
39	SUPDT1	O	Supplementary data output.
40	SUPDT2	O	Supplementary data output.
41	SUPDT3	O	Supplementary data output.
42	VSIO	-	Ground for I/O.
43	SUPDT4	O	Supplementary data output.
44	SUPDT5	O	Supplementary data output.
45	VDIO	-	+3.3V Power for I/O.
46	SUPDT6	O	Supplementary data output.
47	SUPDT7	O	Supplementary data output. (MSB)
48	XSUPAK	O	Supplementary data Acknowledge output terminal.
49	VSC	-	Ground for CORE.
50	TESTO	O	Output for TEST. (open)
51	TESTI	I	Input for TEST. It fixed to "L" potential.
52	TESTI	I	Input for TEST. It fixed to "L" potential.
53	TESTO	O	Output for TEST. (open)
54	VDC	-	+2.5V Power for CORE.
55	DSADML	O	DSD Data output terminal for Lch Down Mix.
56	DSADMR	O	DSD Data output terminal for Rch Down Mix.
57	BCKASL	I	I/O selection terminal of the Bit clock for DSD data output. L=input (Slave), H=output (Master)
58	VSDSD	-	Ground terminal for DSD data output.
59	BCKAI	I	Bit clock input terminal for DSD data output. Input a Bit clock into this terminal at the time of BCKASL="L" potential.
60	BCKAO	O	Bit clock output terminal for DSD data output. Bit clock output from this terminal at the time of BCKASL="H" potential.
61	PHREFI	I	Reference phase signal input terminal for DSD output phase modulation.
62	PHREFO	O	Reference phase signal output terminal for DSD output phase modulation.

IC401: CXD2753R

No.	Pin Name	I/O	Functions
63	ZDFL	O	Lch zero-data detection flag (at the time of mcom setup). It will be set to "H" if non-sound data continues 300 msecs.
64	DSAL	O	DSD data output terminal for Lch speaker.
65	ZDFR	O	Rch zero-data detection flag (at the time of mcom setup). It will be set to "H" if non-sound data continues 300 msecs.
66	DSAR	O	DSD data output terminal for Rch speaker.
67	VDDSD	-	+3.3V Power for DSD data output.
68	ZDFC	O	Cch zero-data detection flag (at the time of mcom setup). It will be set to "H" if non-sound data continues 300 msecs.
69	DSAC	O	DSD data output terminal for Cch speaker.
70	ZDFLFE	O	LFEch zero-data detection flag (at the time of mcom setup). It will be set to "H" if non-sound data continues 300 msecs.
71	DSASW	O	DSD data output terminal for SWch speaker.
72	VSDSD	-	Ground for DSD data output.
73	ZDFLS	O	LSch zero-data detection flag (at the time of mcom setup). It will be set to "H" if non-sound data continues 300 msecs.
74	DSALS	O	DSD data output terminal for LSch speaker.
75	ZDFRS	O	RSch zero-data detection flag (at the time of mcom setup). It will be set to "H" if non-sound data continues 300 msecs.
76	DSARS	O	DSD data output terminal for RSch speaker.
77	VDDSD	O	+3.3V Power for DSD data output.
78	IOUT0	O	Data output terminal 0 for IEEE1394 link chip I/F.
79	IOUT1	O	Data output terminal 1 for IEEE1394 link chip I/F.
80	VSC	-	Ground for CORE.
81	IOUT2	O	Data output terminal 2 for IEEE1394 link chip I/F.
82	IOUT3	O	Data output terminal 3 for IEEE1394 link chip I/F.
83	VDC	-	+2.5V Power for CORE.
84	IOUT4	O	Data output terminal 4 for IEEE1394 link chip I/F.
85	IOUT5	O	Data output terminal 5 for IEEE1394 link chip I/F.
86	VSIO	-	Ground for I/O.
87	IANCO	O	Transmission information data output terminal for IEEE1394 link chip I/F.
88	IFULL	I	Data transmission hold request signal input terminal for IEEE1394 link chip I/F.
89	IEMPTY	I	High speed transmission request signal input terminal for IEEE1394 link chip I/F.
90	VDIO	-	+3.3V Power for I/O.
91	IFRM	O	Frame reference signal output terminal for IEEE1394 link chip I/F.
92	IOUTE	O	Enable signal output terminal for IEEE1394 link chip I/F.
93	IBCK	O	Data transmission clock output terminal for IEEE1394 link chip I/F.
94	VSC	-	Ground for CORE.
95	TESTI	I	TEST input terminal. It fixed to "H" potential.
96	TESTI	I	TEST input terminal. It fixed to "L" potential.
97	TESTI	Ipu	TEST input terminal. It fixed to "H" potential.
98	TESTO	O	TEST output terminal. (open)
99	VDC	-	+2.5V Power for CORE.
100	TESTI	I	TEST input terminal. It fixed to "L" potential.
101	TESTI	I	TEST input terminal. It fixed to "L" potential.
102	TESTI	I	TEST input terminal. It fixed to "L" potential.
103	TESTI	I	TEST input terminal. It fixed to "L" potential.
104	TESTI	I	TEST input terminal. It fixed to "L" potential.
105	TESTI	I	TEST input terminal. It fixed to "L" potential.
106	VSIO	-	Ground for I/O.
107	TESTI	I	TEST input terminal. It fixed to "L" potential.
108	TESTI	I	TEST input terminal. It fixed to "L" potential.
109	TESTI	I	TEST input terminal. It fixed to "L" potential.
110	VDIO	-	+3.3V Power for I/O.
111	WAD0	I	External A/D data input terminal(LSB) for PSP physical disc mark detection.
112	WAD1	I	External A/D data input terminal for PSP physical disc mark detection.
113	WAD2	I	External A/D data input terminal for PSP physical disc mark detection.
114	WAD3	I	External A/D data input terminal for PSP physical disc mark detection.
115	VSIO	-	Ground for I/O.
116	VSC	-	Ground for CORE.
117	WAD4	I	External A/D data input terminal for PSP physical disc mark detection.
118	WAD5	I	External A/D data input terminal for PSP physical disc mark detection.
119	WAD6	I	External A/D data input terminal for PSP physical disc mark detection.
120	WAD7	I	External A/D data input terminal(MSB) for PSP physical disc mark detection.
121	VDC	-	+2.5V Power for CORE.
122	TESTI	I	TEST input terminal. It fixed to "L" potential.

IC401: CXD2753R

No.	Pin Name	I/O	Functions
123	WCK	I	Operation clock for PSP physical disc mark detection.
124	WAVDD	-	+2.5V Power. A/D Power supply for PSP physical disc mark detection.
125	WAVDD	-	+2.5V Power. A/D Power supply for PSP physical disc mark detection.
126	WARFI	Ai	Analog RF signal input terminal for PSP physical disc mark detection.
127	WAVRB	Ai	A/D bottom reference terminal for PSP physical disc mark detection.
128	WAVSS	-	A/D Ground terminal for PSP physical disc mark detection.
129	WAVSS	-	A/D Ground terminal for PSP physical disc mark detection.
130	VSIO	-	Ground for I/O.
131	DQ7	I/O	SDRAM data input/output terminal. (MSB)
132	DQ6	I/O	SDRAM data input/output terminal.
133	DQ5	I/O	SDRAM data input/output terminal.
134	DQ4	I/O	SDRAM data input/output terminal.
135	VDIO	-	+3.3V Power for I/O.
136	DQ3	I/O	SDRAM data input/output terminal.
137	DQ2	I/O	SDRAM data input/output terminal.
138	DQ1	I/O	SDRAM data input/output terminal.
139	DQ0	I/O	SDRAM data input/output terminal. (LSB)
140	VSIO	-	Ground for I/O.
141	DCLK	O	Clock output terminal for SDRAM.
142	DCKE	O	Clock enable output terminal for SDRAM.
143	XWE	O	Write enable output terminal for SDRAM.
144	XCAS	O	Column address strobe output terminal for SDRAM.
145	XRAS	O	Row address strobe output terminal for SDRAM.
146	VDIO	-	+3.3V Power for I/O.
147	TESTO	O	Output terminal for TEST. (open)
148	A11	O	Address output terminal for SDRAM. (MSB)
149	A10	O	Address output terminal for SDRAM.
150	VSC	-	Ground for CORE.
151	A9	O	Address output terminal for SDRAM.
152	A8	O	Address output terminal for SDRAM.
153	VDC	-	+2.5V Power for CORE.
154	A7	O	Address output terminal for SDRAM.
155	A6	O	Address output terminal for SDRAM.
156	A5	O	Address output terminal for SDRAM.
157	A4	O	Address output terminal for SDRAM.
158	VSIO	-	Ground for I/O.
159	A3	O	Address output terminal for SDRAM.
160	A2	O	Address output terminal for SDRAM.
161	A1	O	Address output terminal for SDRAM.
162	A0	O	Address output terminal for SDRAM. (LSB)
163	VDIO	-	+3.3V Power for I/O.
164	XSRQ	O	Output terminal of the Data Request signal inputted a front-end processor.
165	XSHD	I	Input terminal of the header Flag outputted from a front-end processor.
166	SDCK	I	Input terminal of the data conveyance Clock outputted from a front-end processor.
167	XASK	I	Input terminal of the data valid Flag outputted from a front-end processor.
168	SDEF	I	Input terminal of the error Flag outputted from a front-end processor.
169	SD0	I	Input terminal of the stream Data outputted from a front-end processor.
170	SD1	I	Input terminal of the stream Data outputted from a front-end processor.
171	SD2	I	Input terminal of the stream Data outputted from a front-end processor.
172	SD3	I	Input terminal of the stream Data outputted from a front-end processor.
173	SD4	I	Input terminal of the stream Data outputted from a front-end processor.
174	SD5	I	Input terminal of the stream Data outputted from a front-end processor.
175	SD6	I	Input terminal of the stream Data outputted from a front-end processor.
176	SD7	I	Input terminal of the stream Data outputted from a front-end processor.

Ipu: Pull-up input Ipd: Pull-down input Ai: Analog input

IC731: M30624FGNGP

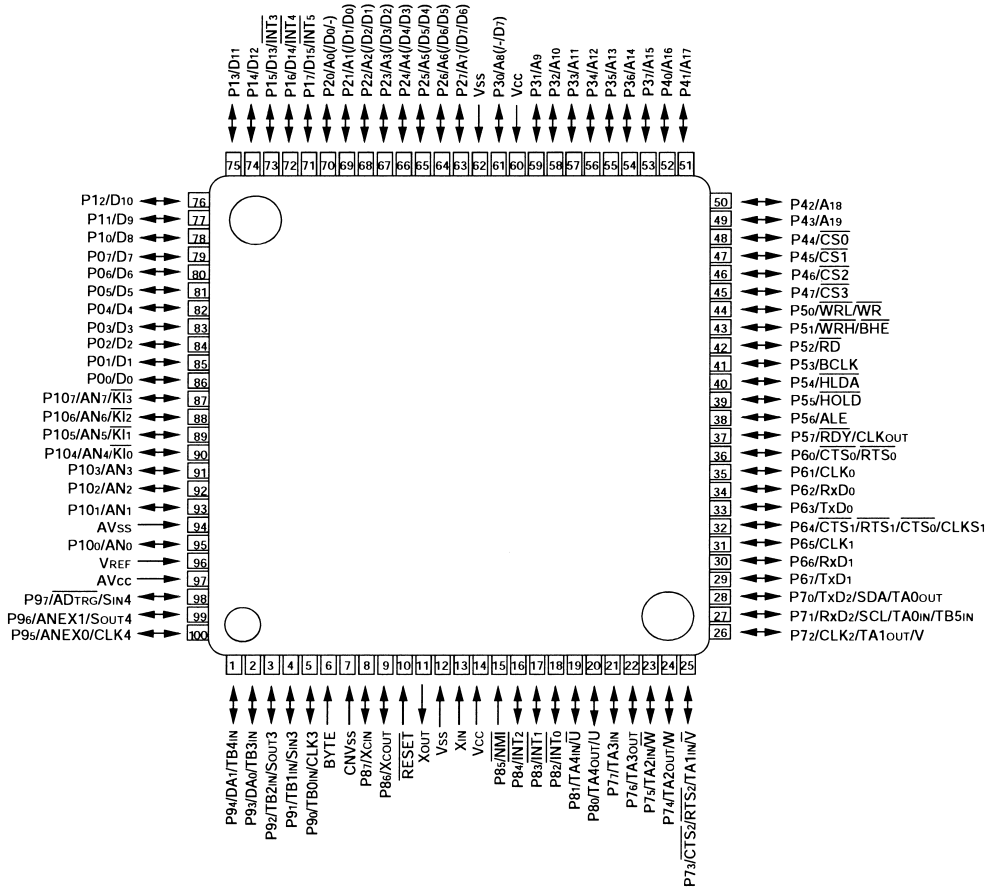

No.	Pin Port	Function	I/O	Initial	Mode	Action	Note	Description (USER1:H/USER2:H)
1	P94/DA1/TB4IN	P94	O	H	MULT_LED	MULTI SURROUND(LED L=ON)		
2	P93/DA0/TB3IN	P93	O	H	DSCS1	CHIP SELECT for FRONT DAC		
3	P92/TB2IN/SOUT3	SOUT3	O	H	DSDO	CONTOROL SERIAL DATA for ALL DAC		CS4379 control data
4	P91/TB1IN/SIN3	P91	I		USER1	MODEL SELECT 1		H
5	P90/TB0IN/CLK3	CLK3	O	H	DSCLK	DATA CLOCK for ALL DAC		CS4379 control data clock
6	BYTE	BYTE	I		BYTE	PULL UP(8bit)		
7	CNVss	CNVss	I		CNVSS	PULL DOWN 5.6k ohm)		
8	P87/XCIN	P87	O	H	DSCS2	CHIP SELECT for SURROUND DAC		CS4379 SURROUND ch chip select
9	P86/XCOUT	P86	O	H	DSCS3	CHIP SELECT for DXP7001 DAC or DISPLAY OFF		DISPLAY OFF=LOW
10	RESET~	RESET~	I		RESET	RESET INPUT		
11	XOUT	XOUT	O		X.TAL	OSC OUT		
12	VSS	VSS	-		VSS	GND		
13	XIN	XIN	I		X.TAL	OSC IN		
14	VCC	VCC	-		3.3V	POWER INPUT		
15	P85/NMI~	P85	I		P_UP1	10K PULL UP(NON CONECT)	NOT USE	
16	P84/INT2~	INT2~	I/O		IR_IN	IR INPUT SIGNAL(Ma:RC-5/ De:SHARP FORMAT)		IR remote control input
17	P83/INT1~	INT1~	I		MINT	INT from CXD1885Q		
18	P82/INT0~	INT0~	I		DRVIRQ	CXD1885Q DATA REQUEST		

IC731: M30624FGNGP

No.	Pin Port	Function	I/O	Initial	Mode	Action	Note	Description (USER1:H/USER2:H)
19	P81/TA4IN/U~	P81	O	L	FS_SW	DAC SYSTEM F78CLK SWITCH SIGNAL(384fs/192fs)		CD:Fix to Low SACD:Fix to High
20	P80/TA4OUT/U	TA4OUT	O	L	PWM	TRAY CONTROL PWM SIGNAL		
21	P77/TA3IN	P77	O	H	SELDSD	SELECT for DSD SIGNAL(PLD)		
22	P76/TA3OUT	P76	O	H	SMUTE	MUTING for CXD2753R		
23	P75/TA2IN/W~	P75	O	H	DSDRST	RESET for CXD2753R		
24	P74/TA2OUT/W	P74	I		MSREADY	SERIAL DATA READY from CXD2753R		
25	P73/CTS2~/RTS2~/ TA1IN/V~	P73	O	H	XMSLAT	SERIAL DATA LATCH for CXD2753R		
26	P72/CLK2/ TA1OUT/V	CLK2	O	H	MSCK	SERIAL DATA CLK for CXD2753R		
27	P71/RXD2/SCL/ TA0IN/TB5IN	RXD2	I		MSDATAO	SERIAL DATA INPUT from CXD2753R	PULL UP	
28	P70/TXD2/SDA/ TA0OUT	TXD2	O	H	MSDATI	SERIAL DATA OUTPUT for CXD2753R	PULL UP	
29	P67/TXD1	P67	O	H	CD_LED	FOR CD SELECT (LED L:ON)	Flash(w:pull up)	
30	P66/RXD1	P66	O	H	SA_LED	FOR SACD SELECT (LED L:ON)	Flash(w:pull up)	
31	P65/CLK1	P65	O	H	PULL_DWN	5.1K PULL DOWN(NON CONECT)	Flash(w:pull down)	
32	P64/CTS1~/RTS1~/ CTS0~/CLKS1	P64	O	H	DRVRST	RESET for CXD1885Q(RESET=L)	Flash(w:pull up)	
33	P63/TXD0	TXD0	O	H	DRVRX	SERIAL DATA for CXD1885Q		
34	P62/RXD0	RXD0	I		DRVTX	SERIAL DATA from CXD1885Q		
35	P61/CLK0	CLK0	O	H	DRVCLK	DATA CLOCK for CXD1885Q		
36	P60/CTS0~/RTS0~	CTS0~	I		DRVRDY	DATA READY SIGNAL from CXD1885Q		
37	P57/RDY~/CLKOUT	RDY~	I		MRDY	READY from CXD1885Q		
38	P56/ALE	P56	I		OPEN1	OPEN(anytime)	Flash (w:pull up)	OPEN (anytime)
39	P55/HOLD~	P55	I		P_UP2	10K PULL UP(NON CONECT)	Flash (w:GND)	
40	P54/HLDA~	P54	-		OPEN2	OPEN		
41	P53/BCLK	P53	-		OPEN3	OPEN		
42	P52/RD~	RD~	O		MRD	READ STROBE for XD1885Q		
43	P51/WRH~/BHE~	P51	-		OPEN4	OPEN		
44	P50/WRL~/WR~	WR~	O		MWR	WRITE STROBE for XD1885Q	Flash(w:pull up)	
45	P47/CS3~	CS3~	O	H	MCS	CHIP SELECT for CXD1885Q		
46	P46/CS2~	CS2~	O	H	MCS2	CHIP SELECT for 1M-SRAM		
47	P45/CS1~	P45	O	H	OPN_DRV	TRAY OPEN DRIVE CONTROL		
48	P44/CS0~	P44	O	H	CLS_DRV	TRAY CLOSE DRIVE CONTROL		
49	P43/A19	P43	O		OPEN4	OPEN		
50	P42/A18	P42	O		OPEN5	OPEN		
51	P41/A17	P41	O		OPEN5	OPEN		
52	P40/A16	A16	O		A16	ADRRES LINE		
53	P37/A15	A15	O		A15	ADRRES LINE		
54	P36/A14	A14	O		A14	ADRRES LINE		
55	P35/A13	A13	O		A13	ADRRES LINE		
56	P34/A12	A12	O		A12	ADRRES LINE		
57	P33/A11	A11	O		A11	ADRRES LINE		
58	P32/A10	A10	O		A10	ADRRES LINE		
59	P31/A9	A9	O		A9	ADRRES LINE		
60	VCC	VCC	-		---	3.3V		
61	P30/A8(/?/D7)	A8	O		A8	ADRRES LINE		
62	VSS	VSS	-		---	GND		
63	P27/A7(/D7/D6)	A7	O		A7	ADRRES LINE		
64	P26/A6(/D6/D5)	A6	O		A6	ADRRES LINE		
65	P25/A5(/D5/D4)	A5	O		A5	ADRRES LINE		
66	P24/A4(/D4/D3)	A4	O		A4	ADRRES LINE		
67	P23/A3(/D3/D2)	A3	O		A3	ADRRES LINE		
68	P22/A2(/D2/D1)	A2	O		A2	ADRRES LINE		
69	P21/A1(/D1/D0)	A1	O		A1	ADRRES LINE		

IC731: M30624FGNGP

No.	Pin Port	Function	I/O	Initial	Mode	Action	Note	Description (USER1:H/USER2:H)
70	P20/A0(/D0/?)	A0	O		A0	ADRRES LINE		
71	P17/D15/INT5~	P17	O	H	ICLK	IIC CLK FOR EE_ROM(AT24C04N)		
72	P16/D14/INT4~	P16	I/O	H	IDAT	IIC DATA FOR EE_ROM(AT24C04N)		
73	P15/D13/INT3~	P15	I		OPN_SW	TRAY OPEN DETECT SW		
74	P14/D12	P14	I		CLS_SW	TRAY CLOSE DETECT SW		
75	P13/D11	P13	O	H	PCMRST	DE:RESET for DXP7001 or Ma:DISPLAY LED(L:ON)	Flash(w:pull up)	RESET for DXP7001(reset=L)
76	P12/D10	P12	I		FILTI	SACD: DAC SYSTEM CLK SWITCHING CONTOROL IN	(Low:384fs/ Hi:192fs)	for FILTER-SW
77	P11/D9	P11	O	H	MUT2	MUTING for MULTI CHANNEL(H:MUTE)	RELAY/TR	
78	P10/D8	P10	O	H	MUT1	MUTING for STEREO CHANNEL(H:MUTE)	RELAY/TR	
79	P07/D7	D7	I/O		D7	8bit DATA LINE		
80	P06/D6	D6	I/O		D6	8bit DATA LINE		
81	P05/D5	D5	I/O		D5	8bit DATA LINE		
82	P04/D4	D4	I/O		D4	8bit DATA LINE		
83	P03/D3	D3	I/O		D3	8bit DATA LINE		
84	P02/D2	D2	I/O		D2	8bit DATA LINE		
85	P01/D1	D1	I/O		D1	8bit DATA LINE		
86	P00/D0	D0	I/O		D0	8bit DATA LINE		
87	P107/AN7/KI3~	P107	O	H	MODE	CD/SACD SWITCHING SIGNAL(L:CD,SACD:H)		Switching of digital audio data for SACD and CD(L=CD, H=SACD) Data transwission hold to recognition of the next DISC
88	P106/AN6/KI2~	P106	O	L	FCS	DISPLAY CHIP SERECT for FL DRIVER		ML9207-01GP chip select
89	P105/AN5/KI1~	P105	O	H	DSRST2	DSP RESET2 for SURROUND CHANNEL or ATT		Mute signal fo Search
90	P104/AN4/KI0~	P104	O	H	DSRST1	DSP RESET1 for FRONT CHANNEL		RESET for DAC (reset=L)
91	P103/AN3	P103	O	L	FRRST	DISPLAY DRIVER RESET		ML9207-01GP reset
92	P102/AN2	AN2	I		KEY2	KEYS SENS		
93	P101/AN1	AN1	I		KEY1	KEYS SENS		
94	AVSS	AVSS	-		GND	AD GND		
95	P100/AN0	AN0	I		KEY0	KEYS SENS		
96	VRef	Vref	I		3.3V	AD reference		
97	AVcc	AVcc	-		3.3V	AD Vcc		
98	P97/ADTRG~/SIN4	P97	I		USER2	MODEL SELECT 2		H
99	P96/ANEX1/SOUT4	SOUT4	O	L	FDAT	DISPLAY DATA for FL DRIVER		ML9207-01GP control data
100	P95/ANEX0/CLK4	CLK4	O	L	FCLK	DISPLAY CLOCK for FL DRIVER		ML9207-01GP control clock

IC7501: CDX1881AR

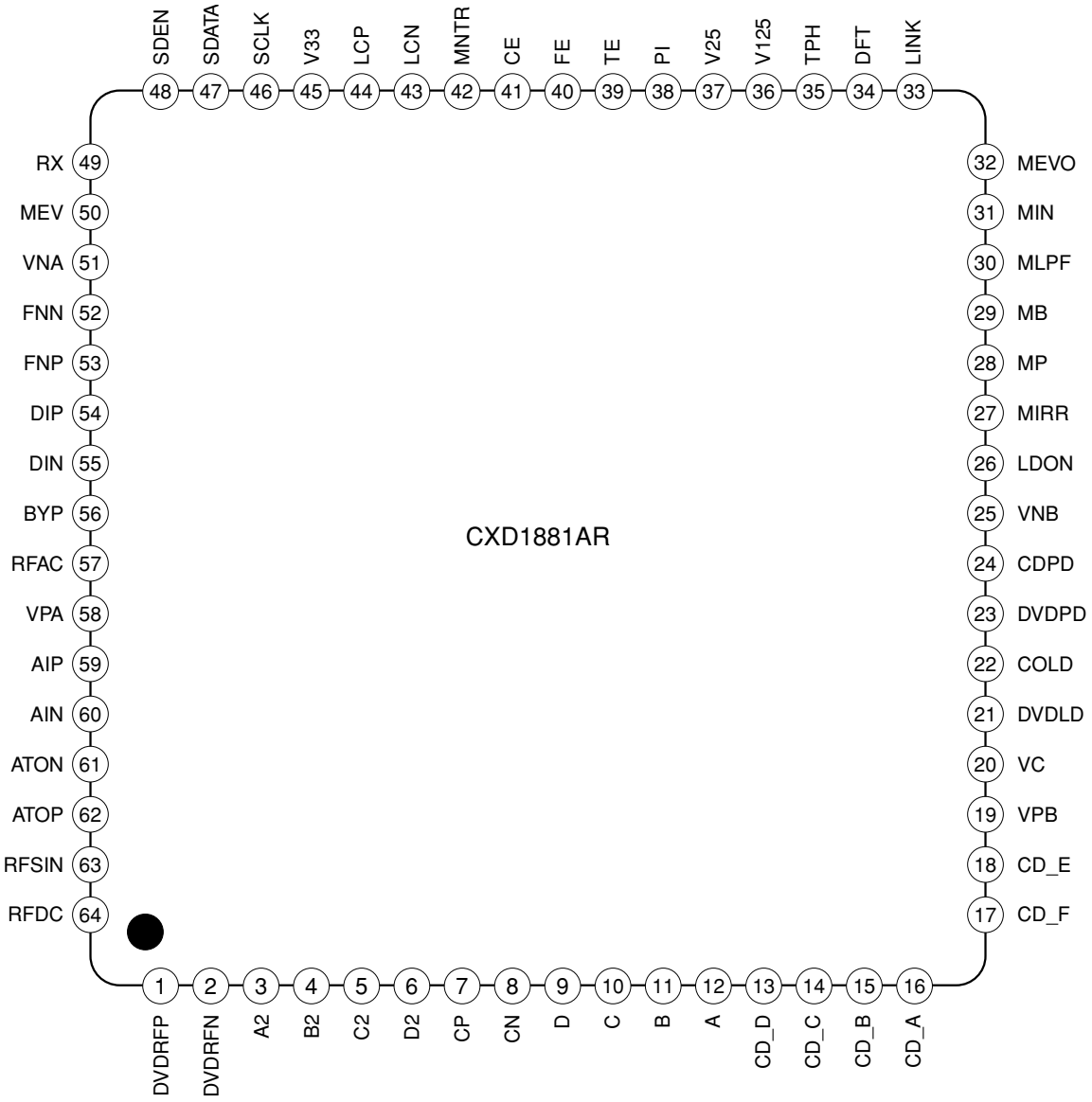

IC501: CDX1881AR

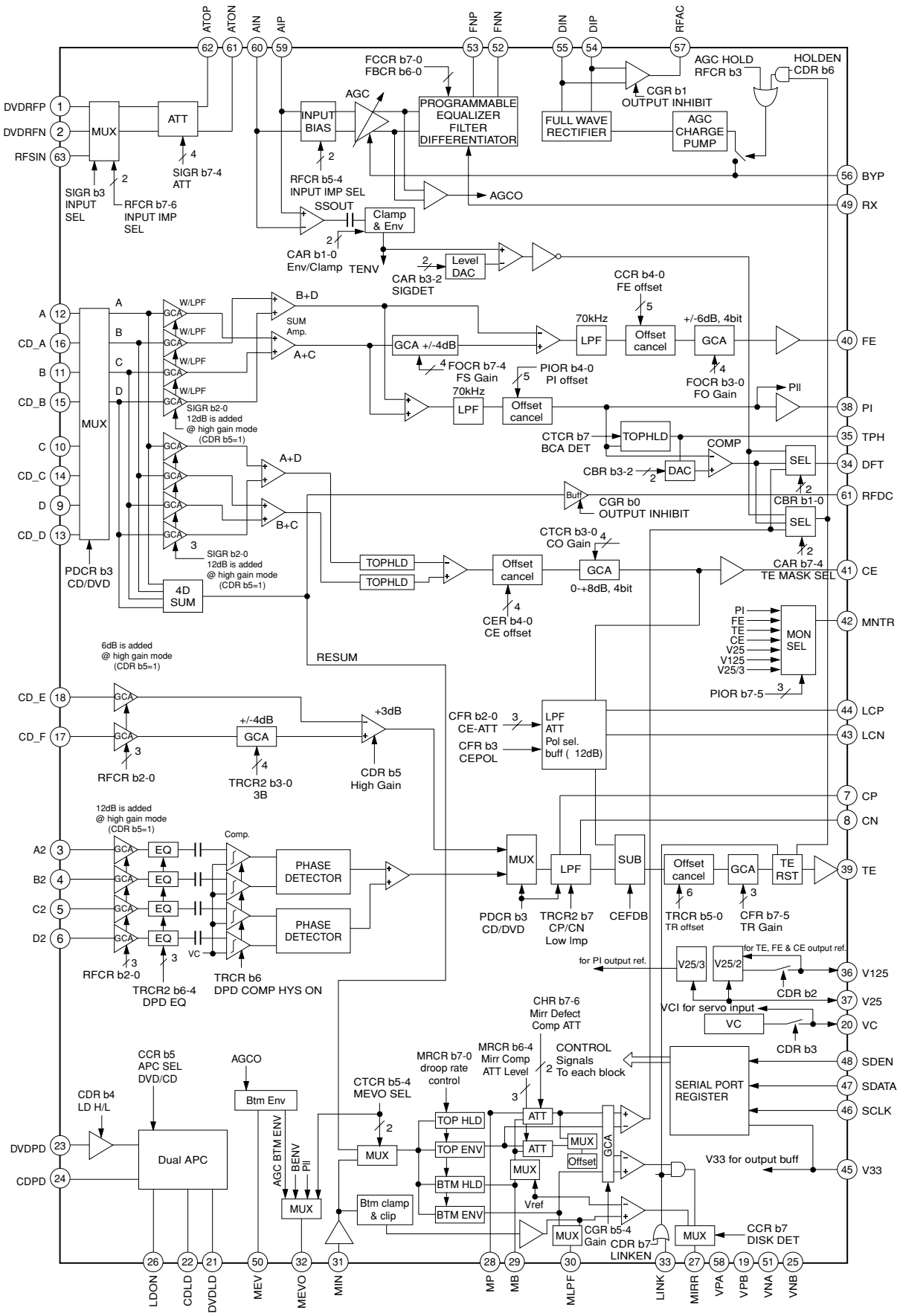

IC501: CDX1881AR

Power Supply Pins

Name	I/O	Function
VPA	-	Power for RF and serial port
VPB	-	Power for servo
VNA	-	GND for RF and serial port
VNB	-	GND for servo
V33	-	Power for output buffer
V25	-	Reference Power for servo output

Input Pins

Name	I/O	Function
DVDRFP, DVDRFN	I	RF signal input
RFSIN	I	RF signal input
AIP,AIN	I	AGC amp. input
DIP,DIN	I	Analog input for RF single buffer
A,B,C,D	I	Photo detector interface input
A2, B2, C2, D2	I	Photo detector interface input
CD_A, B, C, D	I	CD photo detector interface input
CD_E, F	I	CD photo detector interface input
MIN	I	RF signal input for mirror
DVDPD	I	APC input
CDPD	I	APC input
LDON	I	APC input ON/OFF (L:Open)
	I	Link signal input (L:Open)
	O	Mirror monitor output

Output Pins

Name	I/O	Function
ATOP,ATON	O	Differential attenuator output
FNP,FNN	O	Differential normal output
RFAC	O	Single end normal output
RFDC	O	RF signal output
FE	O	Focus error signal output
TE	O	Tracking error signal output
CE	O	Center error signal output
MEVO	O	RFDDC bottom envelope output
DFT	O	Defect output
MIRR	O	Mirror detected output
PI	O	Pull-in signal output
DVDLD	O	APC output
CDLD	O	APC output
MNTR	O	Monitor output

Analog Pins

Name	I/O	Function
BYP	-	RF AGC integration capacitor connecting terminal
CP	-	Differential phase tracking LPF terminal
CN	-	Differential phase tracking LPF terminal
LCP	-	Lens shift offset cancel LPF terminal
LCN	-	Lens shift offset cancel LPF terminal
MP	-	MIRR top hold terminal
MB	-	MIRR bottom hold terminal
MEV	-	RFDC bottom envelope terminal
MLPF	-	Mirror LPF terminal
TPH	-	PI top hold terminal
VC	-	Reference voltage output
V125	-	Reference voltage output
RX	-	Reference resistor input

Serial Port Pins

Name	I/O	Function
SDEN	I	Serial data enable
SDATA	I/O	Serial data
SCLK	I	Serial clock

IC402: 16M SDRAM (EM636165TS-7 etc)

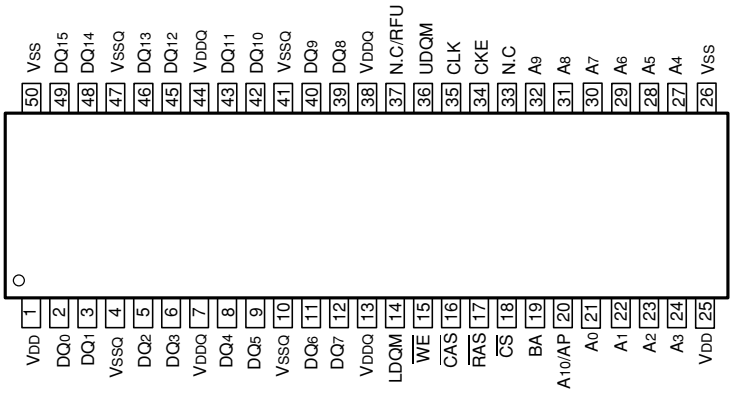

Terminal Function

Pin No.	Pin Name	Symbol	Function
1	V_{DD}	Power Supply/Ground	Power and ground for the input buffer and the core logic
2	DQ_0	Data Input/Output	Data input/output are mutiplexed on the same pin
3	DQ_1	Data Input/Output	Data input/output are mutiplexed on the same pin
4	V_{SSQ}	Data Output Power/Ground	Isolated power supply and ground for the output buffer
5	DQ_2	Data Input/Output	Data input/output are mutiplexed on the same pin
6	DQ_3	Data Input/Output	Data input/output are mutiplexed on the same pin
7	V_{DDQ}	Data Output Power/Ground	Isolated power supply and ground for the output buffer
8	DQ_4	Data Input/Output	Data input/output are mutiplexed on the same pin
9	DQ_5	Data Input/Output	Data input/output are mutiplexed on the same pin
10	V_{SSQ}	Data Output Power/Ground	Isolated power supply and ground for the output buffer
11	DQ_6	Data Input/Output	Data input/output are multiplexed on the same pin
12	DQ_7	Data Input/Output	Data input/output are multiplexed on the same pin
13	V_{DDQ}	Data Output Power/Ground	Isolated power supply and ground for the output buffer
14	L DQM	Data Input/Output Mask	Blocks data input when active
15	$\overline{WE}$	Write Enable	Enables write operation and row precharge
16	$\overline{CAS}$	Column Address Strobe	Latches column address on the positive going edge of the CLK at low
17	$\overline{RAS}$	Row Address Strobe	Latches row address on the positive going edge of the CLK at low
18	$\overline{CS}$	Chip Select	Disables or enables device operation by masking or enabling all inputs except CLK, CKE, and LDQM
19	BA	Bank Select Address	Selects bank to be activated during row address latch time
20	A_{10}/AP	Address	Row/column addresses are multiplexed on the same pin
21	A_0	Address	Row/column addresses are multiplexed on the same pin
22	A_1	Address	Row/column addresses are multiplexed on the same pin
23	A_2	Address	Row/column addresses are multiplexed on the same pin
24	A_3	Address	Row/column addresses are multiplexed on the same pin
25	V_{DD}	Power Supply/Ground	Power and ground for the input buffer and the core logic
26	V_{SS}	Power Supply/Ground	Power and ground for the input buffer and the core logic
27	A_4	Address	Row/column addresses are multiplexed on the same pin
28	A_5	Address	Row/column addresses are multiplexed on the same pin
29	A_6	Address	Row/column addresses are multiplexed on the same pin
30	A_7	Address	Row/column addresses are multiplexed on the same pin
31	A_8	Address	Row/column addresses are multiplexed on the same pin
32	A_9	Address	Row/column addresses are multiplexed on the same pin
33	N. C	No Connection	No connect pin
34	CKE	Clock Enable	Masks system clock to freeze operation from the next clock cycle
35	CLK	System Clock	Active on the positive going edge to sample all inputs
36	U DQM	Data Input/Output Mask	Blocks data input when active
37	N. C/RFU	NC/Reserved	No connect pin
38	V_{DDQ}	Data Output Power/Ground	Isolated power supply and ground for the output buffer
39	DQ_8	Data Input/Output	Data input/output are multiplexed on the same pin
40	DQ_9	Data Input/Output	Data input/output are multiplexed on the same pin
41	V_{SSQ}	Data Output Power/Ground	Isolated power supply and ground for the output buffer
42	DQ_{10}	Data Input/Output	Data input/output are multiplexed on the same pin
43	DQ_{11}	Data Input/Output	Data input/output are multiplexed on the same pin
44	V_{DDQ}	Data Output Power/Ground	Isolated power supply and ground for the output buffer
45	DQ_{12}	Data Input/Output	Data input/output are multiplexed on the same pin
46	DQ_{13}	Data Input/Output	Data input/output are multiplexed on the same pin
47	V_{SSQ}	Data Output Power/Ground	Isolated power supply and ground for the output buffer
48	DQ_{14}	Data Input/Output	Data input/output are multiplexed on the same pin
49	DQ_{15}	Data Input/Output	Data input/output are multiplexed on the same pin
50	V_{SS}	Power Supply/Ground	Power and ground for the input buffer and the core logic

IC508: FAN8042

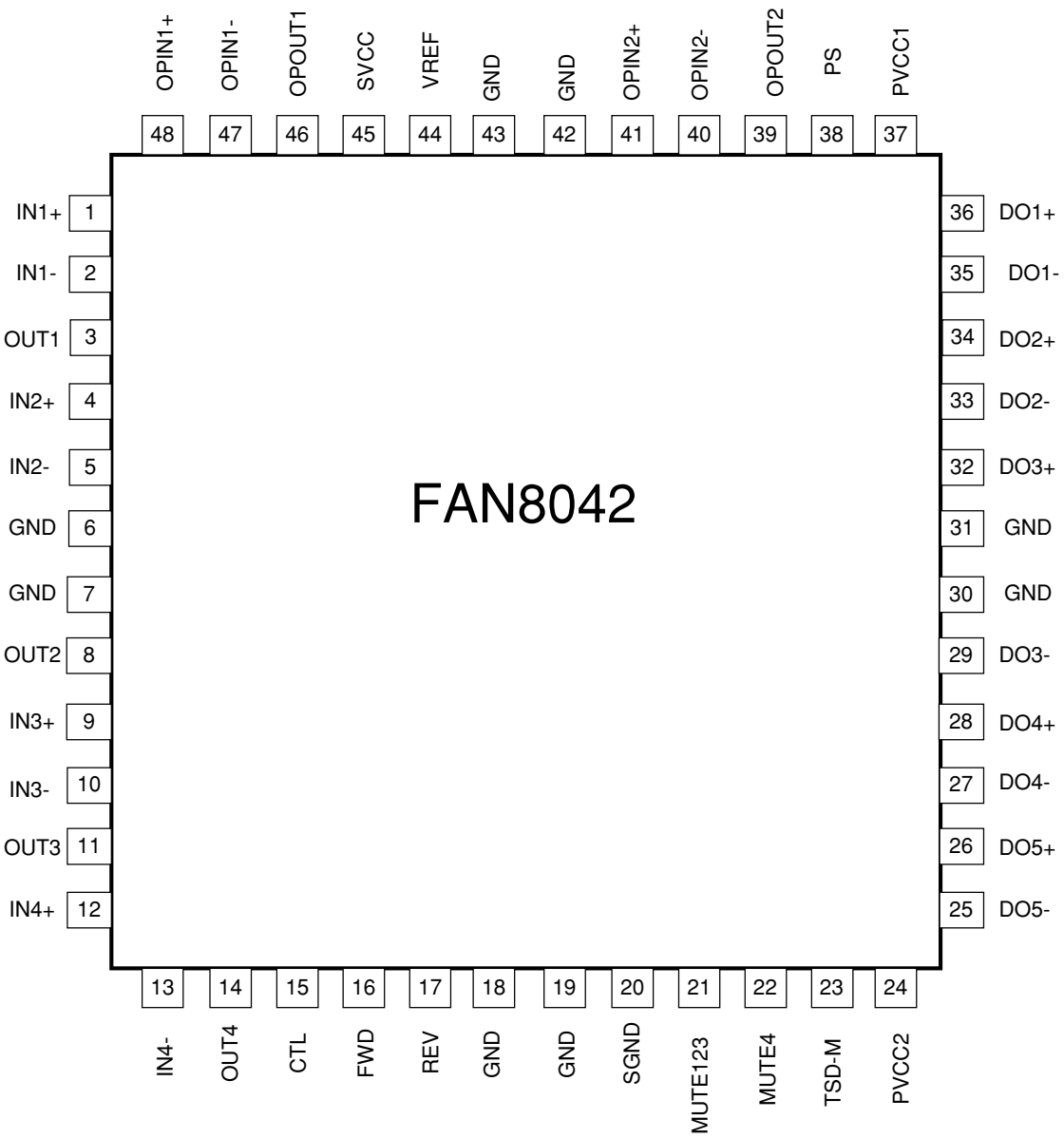

IC508: FAN8042

No.	Pin Name	I/O	Pin Function Description
1	IN1+	I	CH1 op-amp input (+)
2	IN1-	I	CH1 op-amp input (-)
3	OUT1	O	CH1 op-amp output
4	IN2+	I	CH2 op-amp input (+)
5	IN2-	I	CH2 op-amp input (-)
6	GND	-	Ground
7	GND	-	Ground
8	OUT2	O	CH2 op-amp output
9	IN3+	I	CH3 op-amp input (+)
10	IN3-	I	CH3 op-amp input (-)
11	OUT3	O	CH3 op-amp output
12	IN4+	I	CH4 op-amp input (+)
13	IN4-	I	CH4 op-amp input (-)
14	OUT4	O	CH4 op-amp output
15	CTL	I	CH5 motor speed control
16	FWD	I	CH5 forward input
17	REV	I	CH5 reverse input
18	GND	-	Ground
19	GND	-	Ground
20	SGND	-	Signal Ground
21	MUTE123	I	Mute for CH1,2,3
22	MUTE4	I	Mute for CH4
23	TSD-M	O	TSD monitor
24	PVCC2	-	Power supply voltage 2 (For CH4,CH5)
25	DO5-	O	CH5 drive output (-)
26	DO5+	O	CH5 drive output (+)
27	DO4-	O	CH4 drive output (-)
28	DO4+	O	CH4 drive output (+)
29	DO3-	O	CH3 drive output (-)
30	GND	-	Ground
31	GND	-	Ground
32	DO3+	O	CH3 drive output (+)
33	DO2-	O	CH2 drive output (-)
34	DO2+	O	CH2 drive output (+)
35	DO1-	O	CH1 drive output (-)
36	DO1+	O	CH1 drive output (+)
37	PVCC1	-	Power supply voltage 1 (FOR CH1 CH2,CH3)
38	PS	I	Power save
39	OPOUT2	O	Normal op-amp2 output
40	OPIN2-	I	Normal op-amp2 input (-)
41	OPIN2+	I	Normal op-amp2 input (+)
42	GND	-	Ground
43	GND	-	Ground
44	VREF	I	Bias voltage input
45	SVCC	-	Signal & OPAMPs supply voltage
46	OPOUT1	O	Normal op-amp1 output
47	OPIN1-	I	Normal op-amp1 input (-)
48	OPIN1+	I	Normal op-amp1 input (+)

IC508: FAN8042

Internal Block Diagram

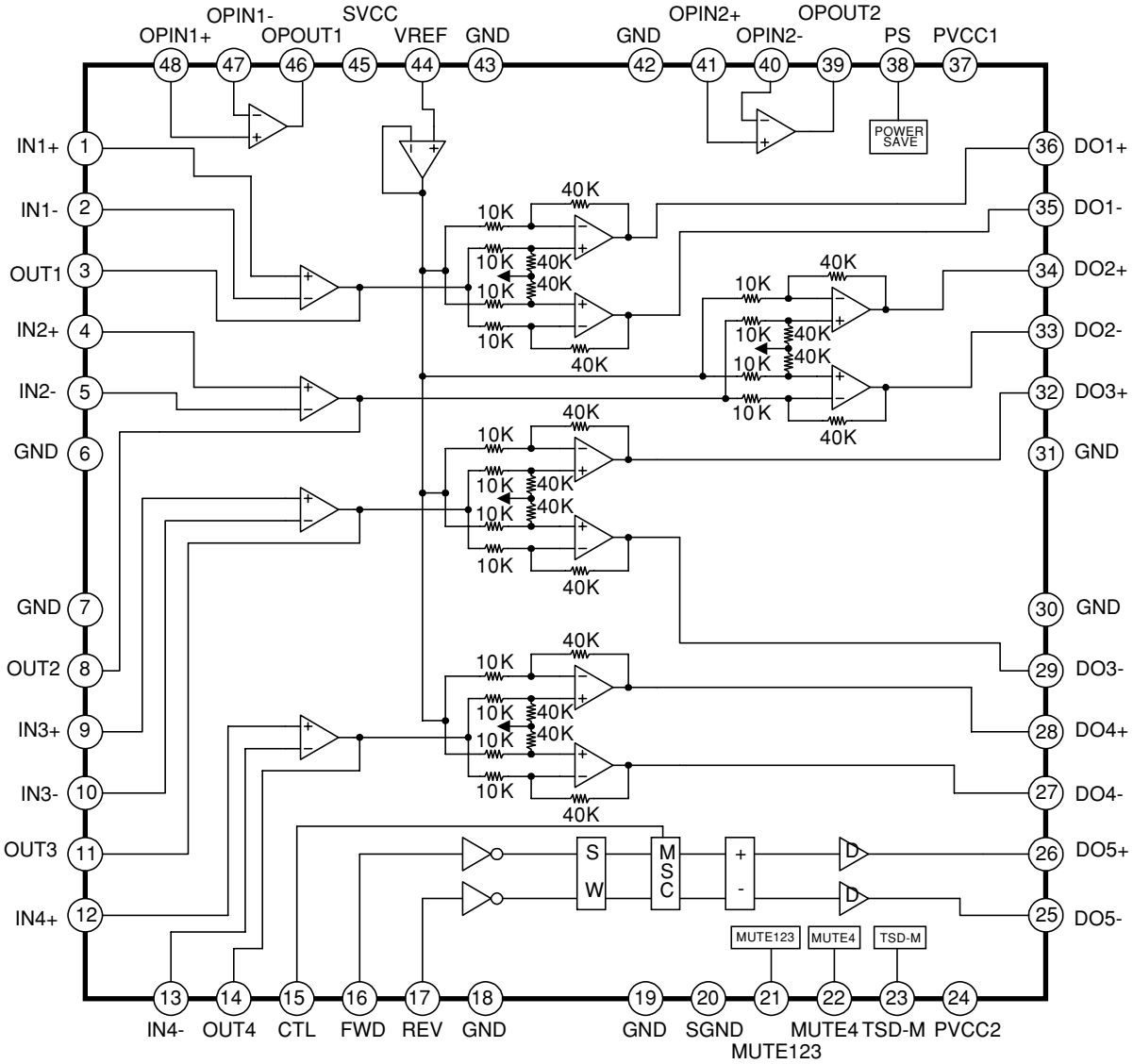

Note. Detailed circuit of the output power amp

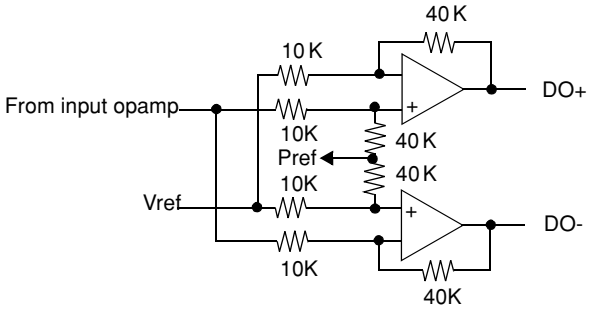

Pref1 is almost PVCC1 / 2
Pref2 is almost PVCC2 / 2

IC503: M11L16161SA-45T

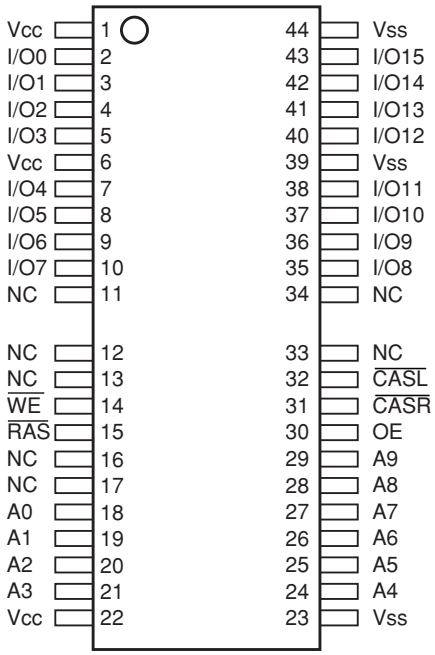

PIN DESCRIPTIONS

PIN NO. (SOJ Package)	PIN NAME	TYPE	DESCRIPTION
17~20,23~28	A0~A9	Input	Address Input Row Address:A0~A9 Column Address:A0~A9
14	$\overline{RAS}$	Input	Row Address Strobe
30	$\overline{CASH}$	Input	Column Address Strobe/Upper Byte Control
31	$\overline{CASL}$	Input	Column Address Strobe/Lower Byte Control
13	$\overline{WE}$	Input	Write Enable
29	$\overline{OE}$	Input	Output Enable
2~5,7~10, 33~36,38~41	I/O0~I/O15	Input/Output	Data Input/Output
1,6,21	Vcc	Supply	Power,(5V or 3.3V)
22,37,42	Vss	Ground	Ground
11,12,15,16,32	NC	-	No Connect

IC733: S-80843C

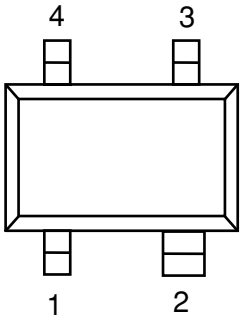

1	OUT
2	VDD
3	N.C.
4	VSS

IC734: TC74VHC74FT

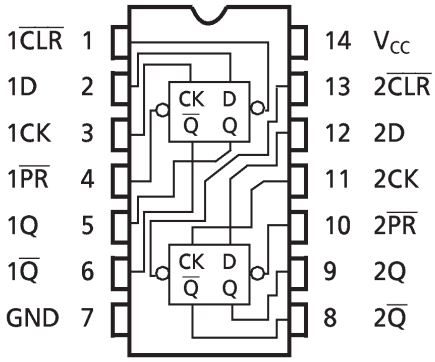

IC736: TC74VHC157FT

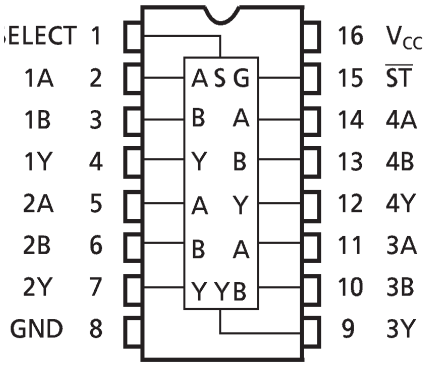

IC737: AT24C04

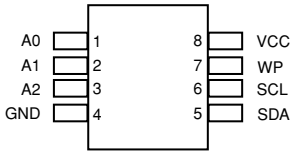

Pin Configurations

Pin Name	Function
A0 - A2	Address Inputs
SDA	Sedrial Data
SCL	Sedrial Clock Input
WP	Write Protect
NC	No Connect

TRASISTORS

DTA114EK — PNP
DTC114EK — NPN

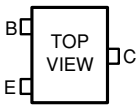

DTA Series

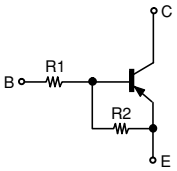

	R1	R2
DTA114EK	10kohm	10kohm

DTC Series

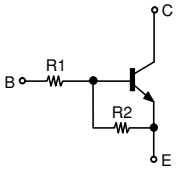

	R1	R2
DTC114EK	10kohm	10kohm

2. BLOCK DIAGRAM

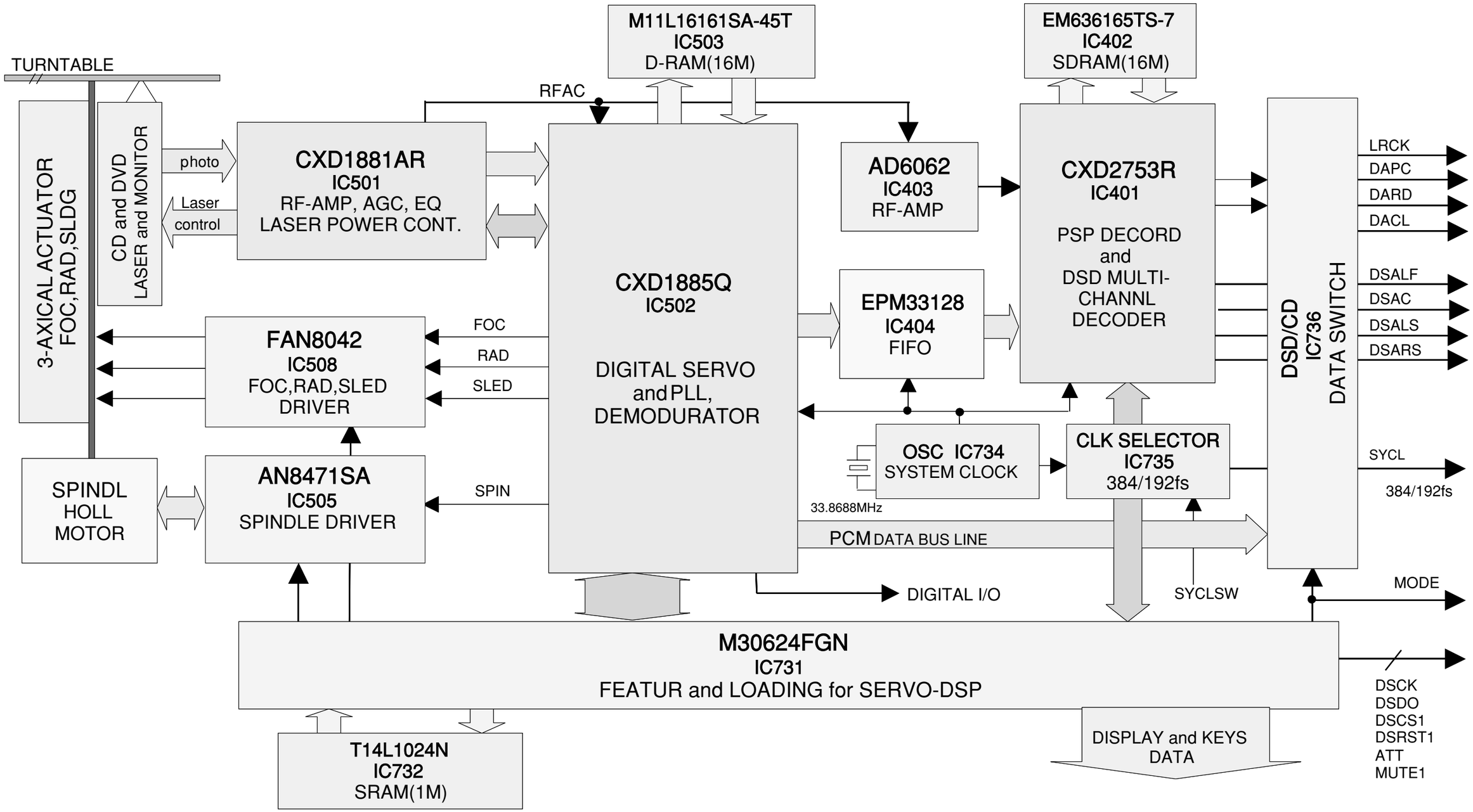

3. SCHEMATIC DIAGRAM

Super Audio CD MODULE UNIT - 1/6

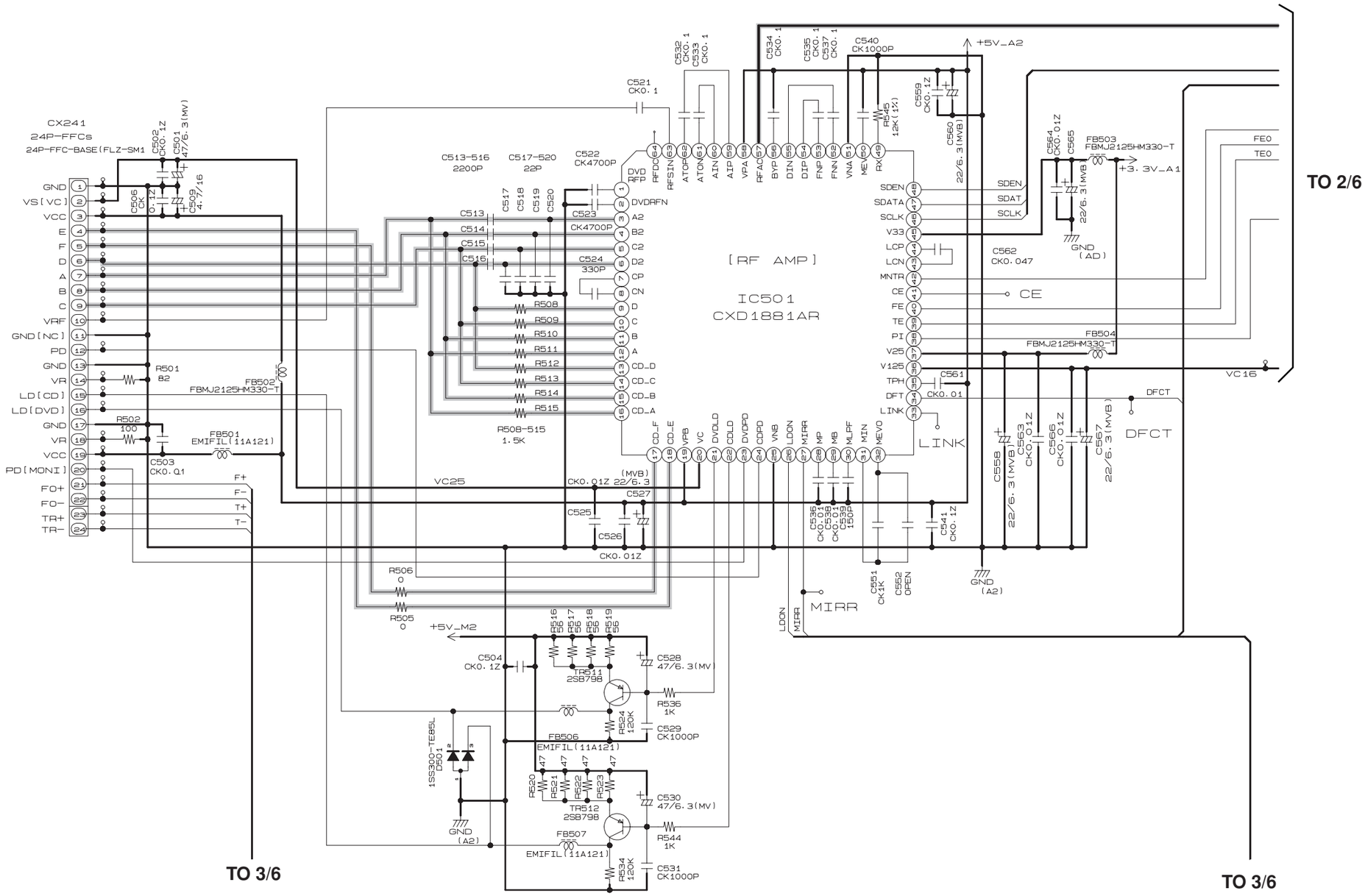

Super Audio CD MODULE UNIT - 2/6

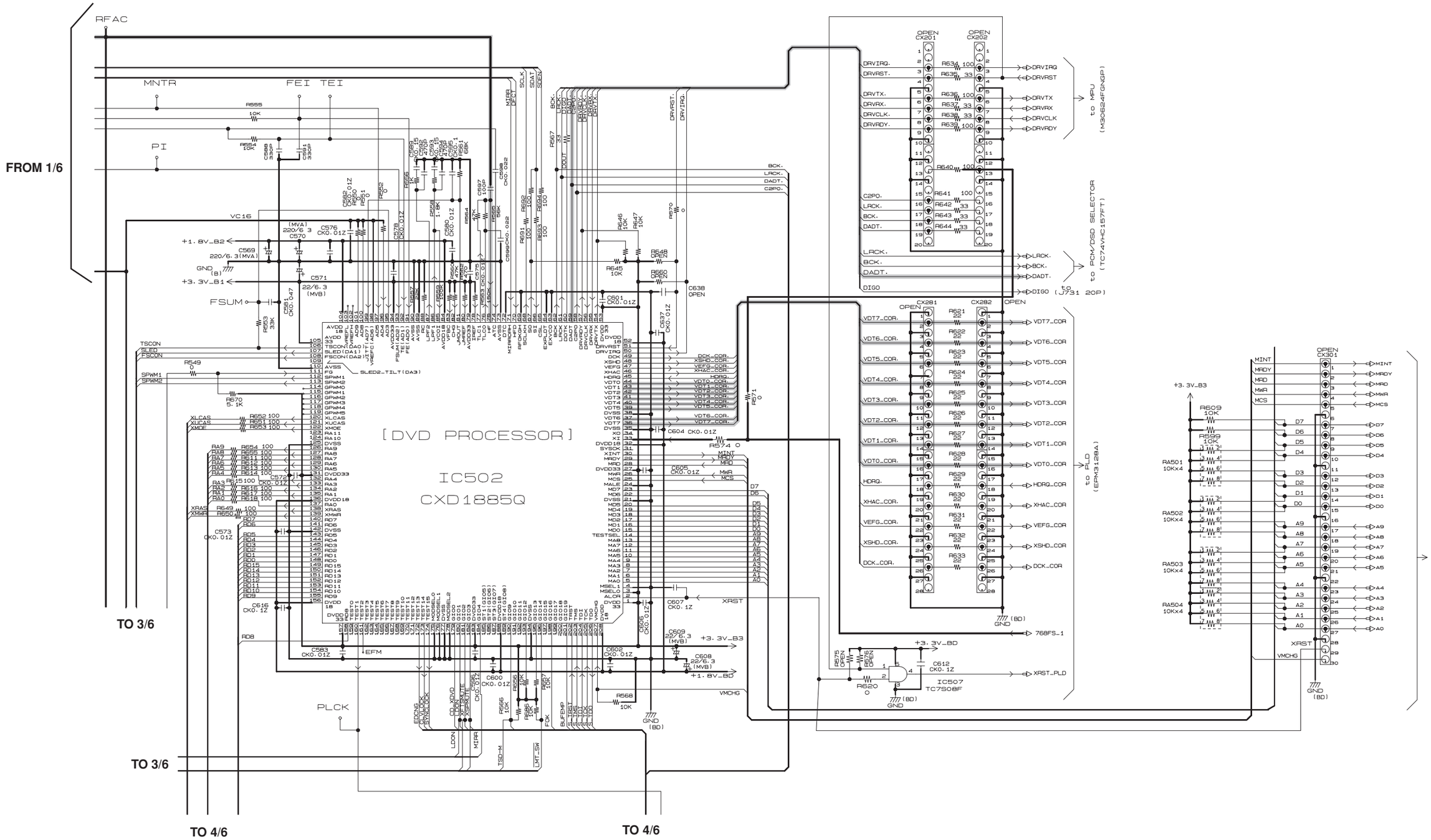

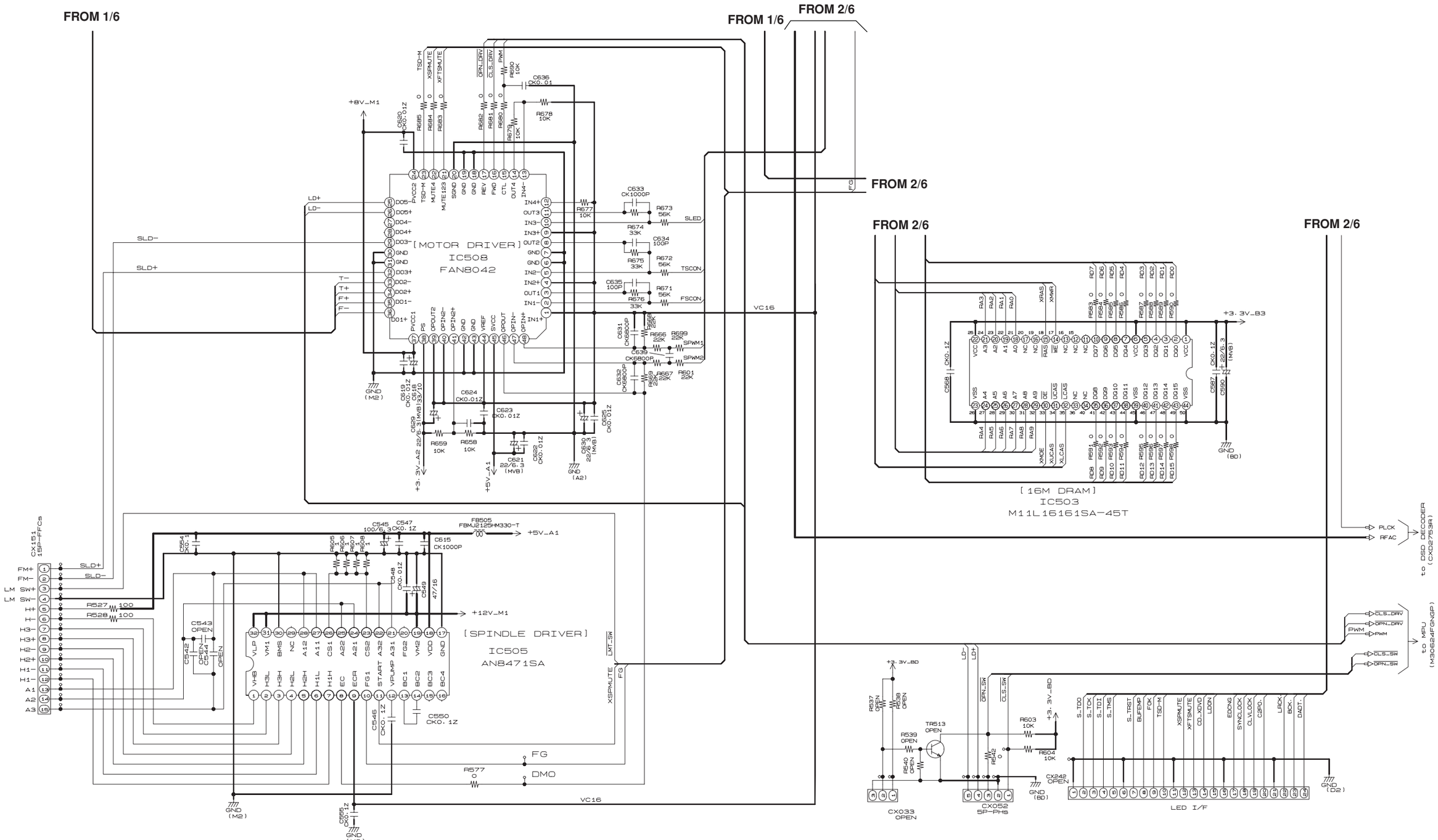
FROM 1/6
FROM 1/6
FROM 2/6
FROM 2/6
FROM 2/6
FROM 2/6
[MOTOR DRIVER]
IC508
FAN8042
[16M DRAM]
IC503
M11L16161SA-45T
[SPINDLE DRIVER]
IC505
AN8471SA
CX151
15P-FFCS
to DSD DECODER
(CXD2753R)
to MPU
(M30624FGNGP)
LED I/F
CX033
OPEN
CX052
5P-PHS
CX242
OPEN
VC16
+8V_M1
+12V_M1
+5V_A1
+3.3V_B3
+3.3V_BD
FG
DMO
PLCK
RFAC
CLS_DRV
OPN_DRV
PWM
CLS_SW
OPN_SW
SLED
TSCON
FSCON
SPWM1
SPWM2
SLD+
SLD-
LD+
LD-
GND (M2)
GND (A2)
GND (BD)
GND (D2)

Super Audio CD MODULE UNIT - 4/6

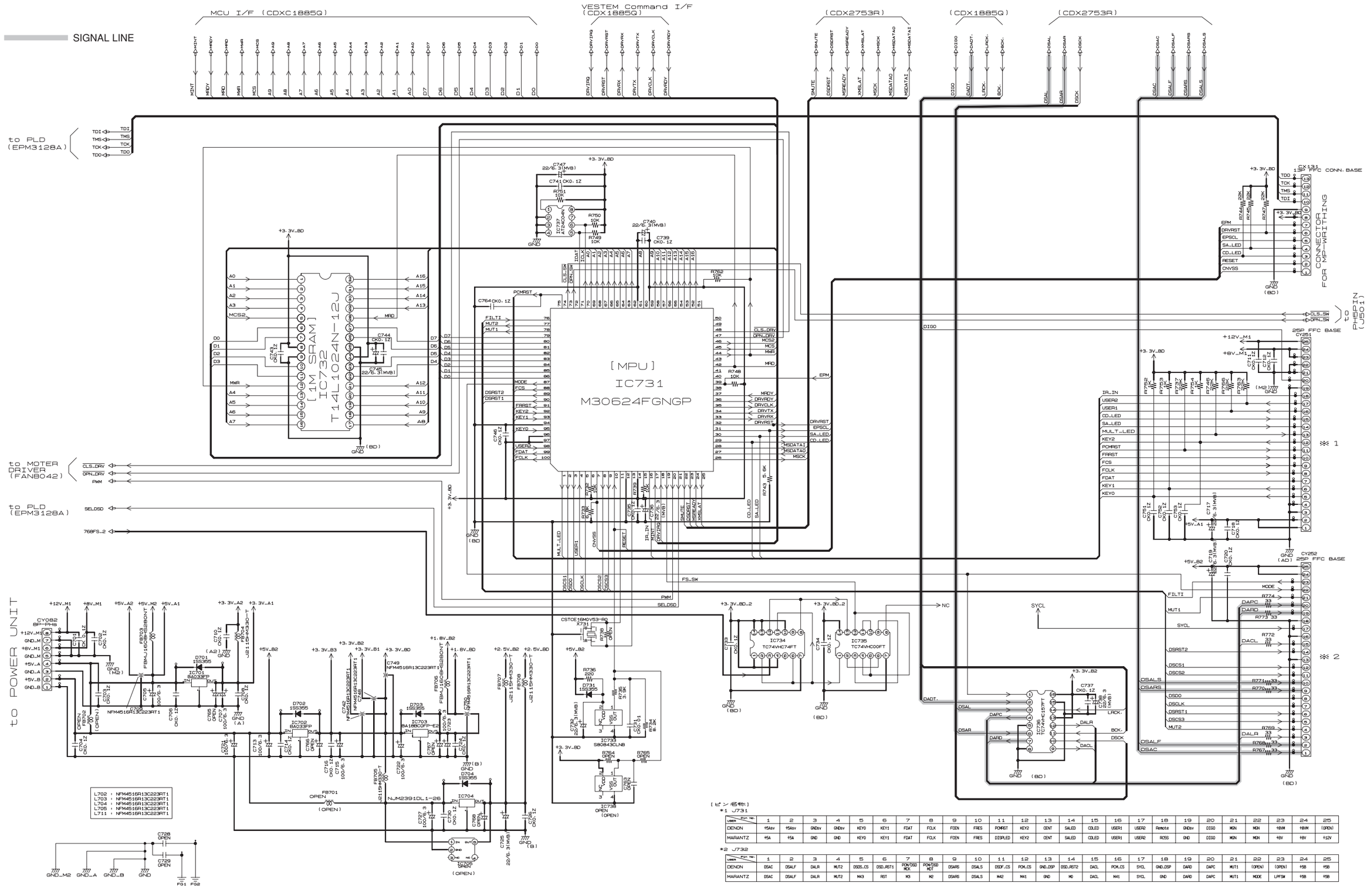

(ピン名称)

*1 J731

USER \ PIN NO.	1	2	3	4	5	6	7	8	9	10	11	12	13	14	15	16	17	18	19	20	21	22	23	24	25
DENON	+5Asv	+5Asv	GNDsv	GNDsv	KEY0	KEY1	FDAT	FCLK	FCEN	FRES	PCMRST	KEY2	CENT	SALED	COLED	USER1	USER2	Remote	GNDsv	DIGO	MGN	MGN	+8VM	+8VM	(OPEN)
MARANTZ	+5A	+5A	GND	GND	KEY0	KEY1	FDAT	FCLK	FCEN	FRES	DISPLED	KEY2	CENT	SALED	COLED	USER1	USER2	RC5S	GND	DIGO	MGN	MGN	+8V	+8V	+12V

*2 J732

USER \ PIN NO.	1	2	3	4	5	6	7	8	9	10	11	12	13	14	15	16	17	18	19	20	21	22	23	24	25
DENON	DSAC	DSALF	DALR	MUT2	DSDS.CS	DSD.RST1	PCM/DSD MDX	PCM/DSD MDT	DSARS	DSALS	DSDF.CS	PCM.CS	GND.DSP	DSD.RST2	DACL	PCM.CS	SYCL	GND.DSP	DARD	DAPC	MUT1	(OPEN)	(OPEN)	+5B	+5B
MARANTZ	DSAC	DSALF	DALR	MUT2	M43	RST	M3	M2	DSARS	DSALS	M42	M41	GND	M0	DACL	M41	SYCL	GND	DARD	DAPC	MUT1	MODE	LPFSW	+5B	+5B

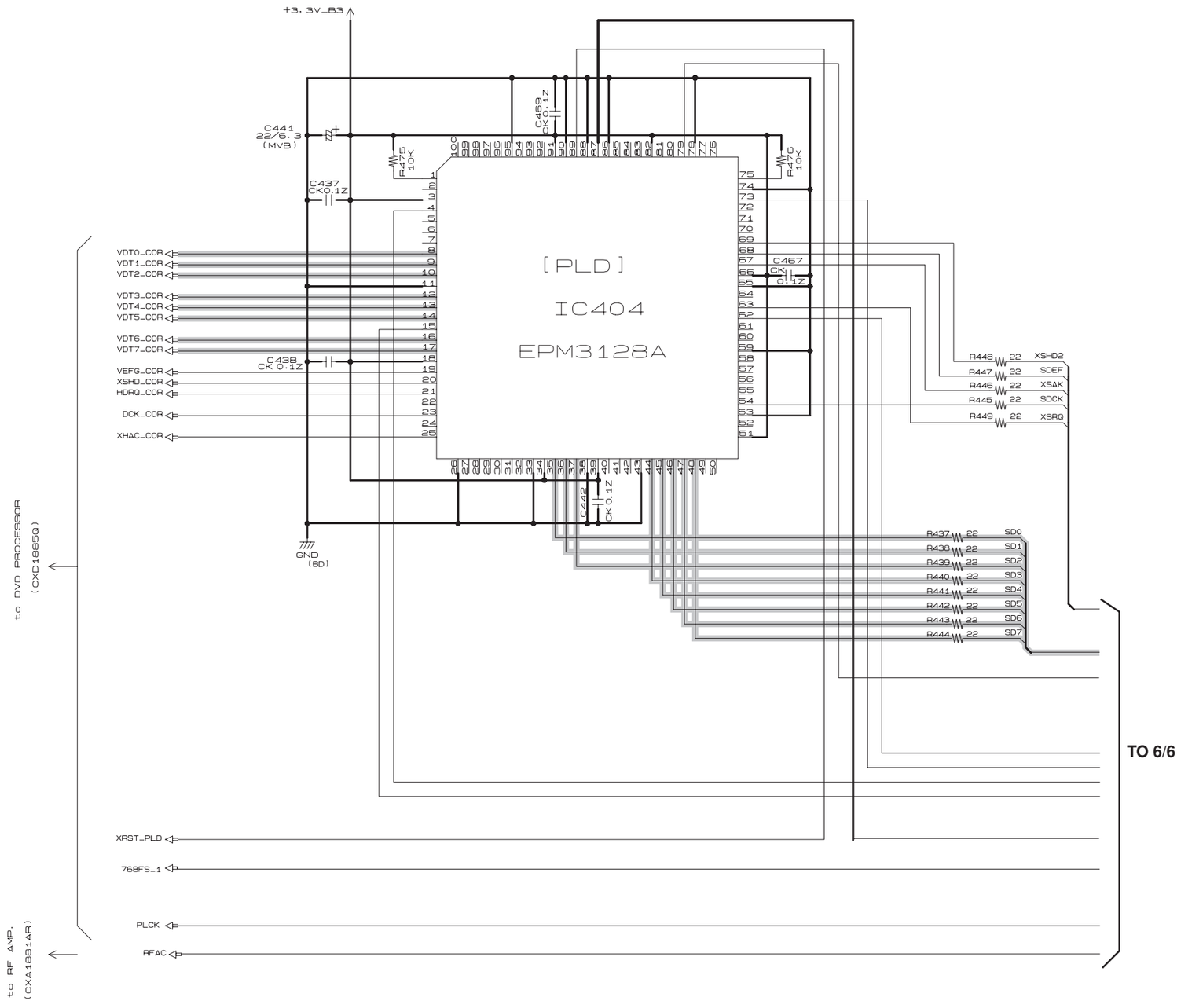
+3.3V_B3
C441
22/6.3
(MVB)
C469
CK0.1Z
R475
10K
R476
10K
C437
CK0.1Z
[PLD]
IC404
EPM3128A
C467
CK
0.1Z
C438
CK 0.1Z
C442
CK0.1Z
GND
(BD)
VDT0_COR
VDT1_COR
VDT2_COR
VDT3_COR
VDT4_COR
VDT5_COR
VDT6_COR
VDT7_COR
VEFG_COR
XSHD_COR
HDRQ_COR
DCK_COR
XHAC_COR
R448 22 XSHD2
R447 22 SDEF
R446 22 XSAK
R445 22 SDCK
R449 22 XSRQ
R437 22 SD0
R438 22 SD1
R439 22 SD2
R440 22 SD3
R441 22 SD4
R442 22 SD5
R443 22 SD6
R444 22 SD7
TO 6/6
XRST_PLD
768FS_1
PLCK
RFAC
to DVD PROCESSOR
(CXD1885Q)
to RF AMP.
(CXA1881AR)

Super Audio CD MODULE UNIT - 6/6

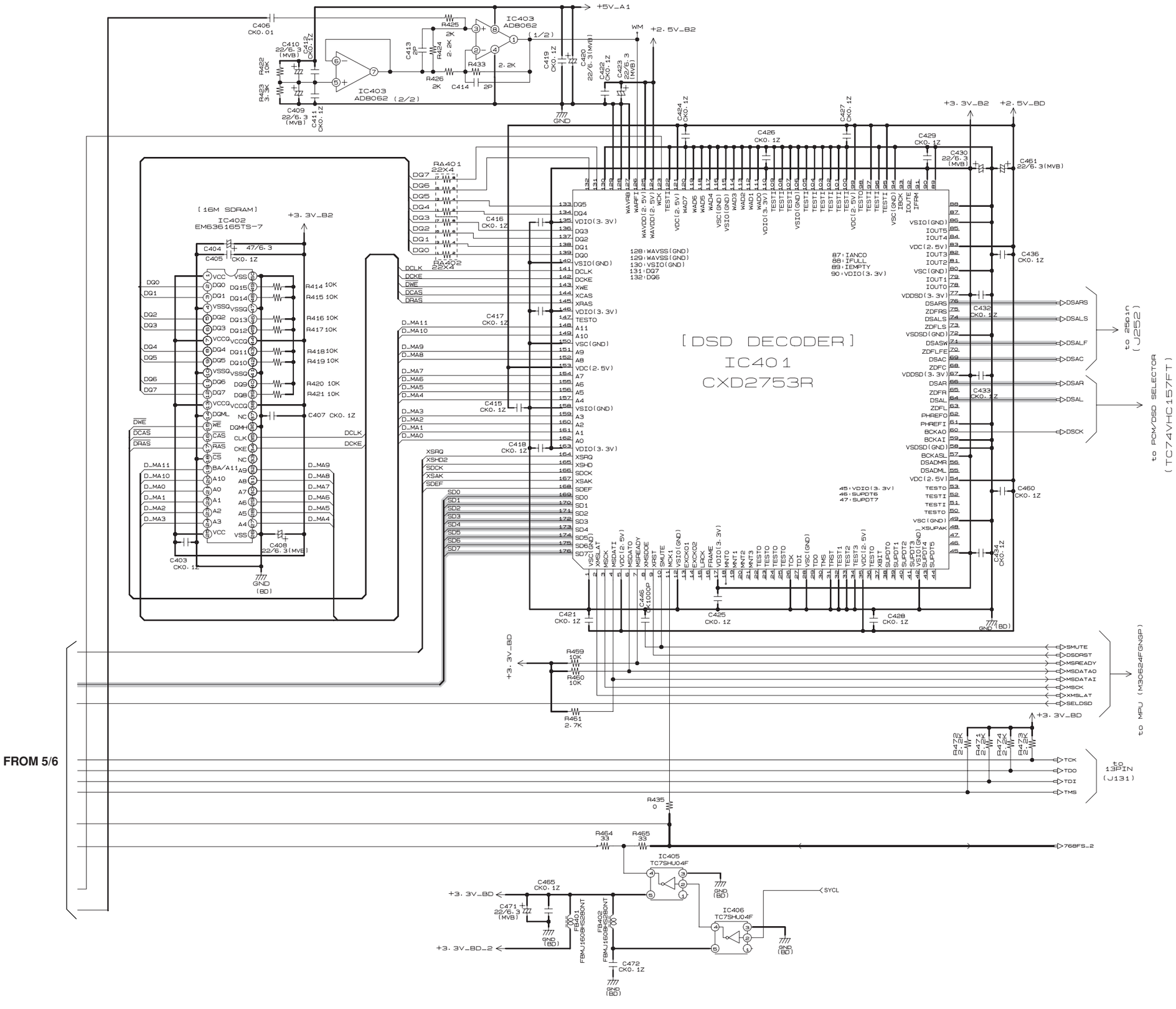

4. PARTS LOCATION

Super Audio CD MODULE UNIT

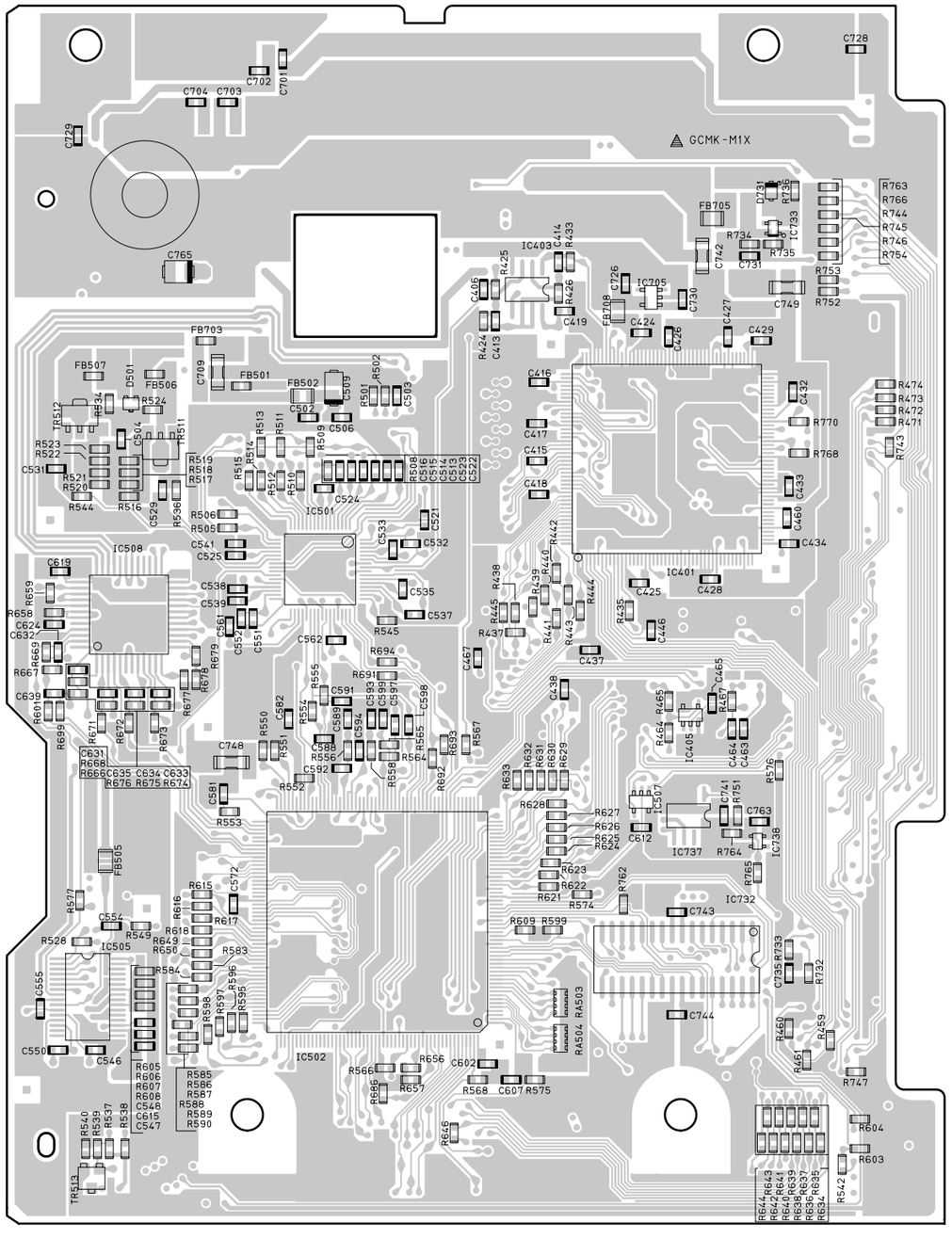

COMPONENT SIDE

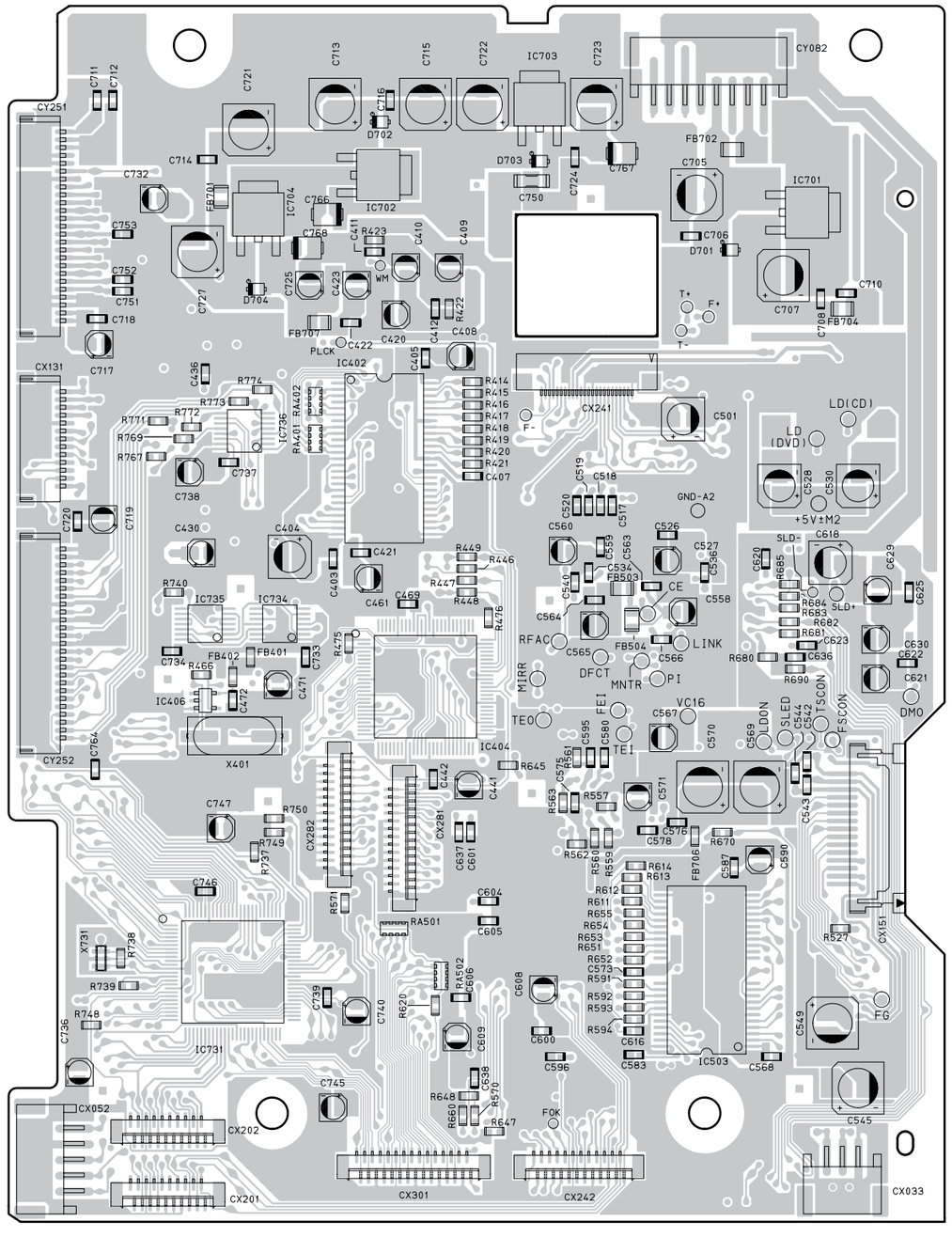

FOIL SIDE

5. ELECTRICAL PARTS LIST

P.C.B. NAME	POS. NO.	VERS. COLOR	PART NO. (FOR EUR)	PART NO. (MJI)	PART NAME	DESCRIPTION
1U-3648	C-409		00MEY22600620	00MEY22600620	ELECT. CHIP	CE67C0J220MT(MV-B) +REF 00D2544464951
1U-3648	C-410		00MEY22600620	00MEY22600620	ELECT. CHIP	CE67C0J220MT(MV-B) +REF 00D2544464951
1U-3648	C-420		00MEY22600620	00MEY22600620	ELECT. CHIP	CE67C0J220MT(MV-B) +REF 00D2544464951
1U-3648	C-423		00MEY22600620	00MEY22600620	ELECT. CHIP	CE67C0J220MT(MV-B) +REF 00D2544464951
1U-3648	C-430		00MEY22600620	00MEY22600620	ELECT. CHIP	CE67C0J220MT(MV-B) +REF 00D2544464951
1U-3648	C-441		00MEY22600620	00MEY22600620	ELECT. CHIP	CE67C0J220MT(MV-B) +REF 00D2544464951
1U-3648	C-461		00MEY22600620	00MEY22600620	ELECT. CHIP	CE67C0J220MT(MV-B) +REF 00D2544464951
1U-3648	C-471		00MEY22600620	00MEY22600620	ELECT. CHIP	CE67C0J220MT(MV-B) +REF 00D2544464951
1U-3648	C-527		00MEY22600620	00MEY22600620	ELECT. CHIP	CE67C0J220MT(MV-B) +REF 00D2544464951
1U-3648	C-558		00MEY22600620	00MEY22600620	ELECT. CHIP	CE67C0J220MT(MV-B) +REF 00D2544464951
1U-3648	C-560		00MEY22600620	00MEY22600620	ELECT. CHIP	CE67C0J220MT(MV-B) +REF 00D2544464951
1U-3648	C-565		00MEY22600620	00MEY22600620	ELECT. CHIP	CE67C0J220MT(MV-B) +REF 00D2544464951
1U-3648	C-408		00MEY22600620	00MEY22600620	ELECT. CHIP	CE67C0J220MT(MV-B) +REF 00D2544464951
1U-3648	C-567		00MEY22600620	00MEY22600620	ELECT. CHIP	CE67C0J220MT(MV-B) +REF 00D2544464951
1U-3648	C-571		00MEY22600620	00MEY22600620	ELECT. CHIP	CE67C0J220MT(MV-B) +REF 00D2544464951
1U-3648	C-590		00MEY22600620	00MEY22600620	ELECT. CHIP	CE67C0J220MT(MV-B) +REF 00D2544464951
1U-3648	C-608		00MEY22600620	00MEY22600620	ELECT. CHIP	CE67C0J220MT(MV-B) +REF 00D2544464951
1U-3648	C-609		00MEY22600620	00MEY22600620	ELECT. CHIP	CE67C0J220MT(MV-B) +REF 00D2544464951
1U-3648	C-621		00MEY22600620	00MEY22600620	ELECT. CHIP	CE67C0J220MT(MV-B) +REF 00D2544464951
1U-3648	C-629		00MEY22600620	00MEY22600620	ELECT. CHIP	CE67C0J220MT(MV-B) +REF 00D2544464951
1U-3648	C-630		00MEY22600620	00MEY22600620	ELECT. CHIP	CE67C0J220MT(MV-B) +REF 00D2544464951
1U-3648	C-717		00MEY22600620	00MEY22600620	ELECT. CHIP	CE67C0J220MT(MV-B) +REF 00D2544464951
1U-3648	C-719		00MEY22600620	00MEY22600620	ELECT. CHIP	CE67C0J220MT(MV-B) +REF 00D2544464951
1U-3648	C-725		00MEY22600620	00MEY22600620	ELECT. CHIP	CE67C0J220MT(MV-B) +REF 00D2544464951
1U-3648	C-732		00MEY22600620	00MEY22600620	ELECT. CHIP	CE67C0J220MT(MV-B) +REF 00D2544464951
1U-3648	C-736		00MEY22600620	00MEY22600620	ELECT. CHIP	CE67C0J220MT(MV-B) +REF 00D2544464951
1U-3648	C-738		00MEY22600620	00MEY22600620	ELECT. CHIP	CE67C0J220MT(MV-B) +REF 00D2544464951
1U-3648	C-740		00MEY22600620	00MEY22600620	ELECT. CHIP	CE67C0J220MT(MV-B) +REF 00D2544464951
1U-3648	C-745		00MEY22600620	00MEY22600620	ELECT. CHIP	CE67C0J220MT(MV-B) +REF 00D2544464951
1U-3648	C-747		00MEY22600620	00MEY22600620	ELECT. CHIP	CE67C0J220MT(MV-B) +REF 00D2544464951
1U-3648	C-545		00MEY10700620	00MEY10700620	ELECT. CHIP	CE67C0J101MT +REF 00D2544464906
1U-3648	C-705		00MEY10700620	00MEY10700620	ELECT. CHIP	CE67C0J101MT +REF 00D2544464906
1U-3648	C-707		00MEY10700620	00MEY10700620	ELECT. CHIP	CE67C0J101MT +REF 00D2544464906
1U-3648	C-713		00MEY10700620	00MEY10700620	ELECT. CHIP	CE67C0J101MT +REF 00D2544464906
1U-3648	C-715		00MEY10700620	00MEY10700620	ELECT. CHIP	CE67C0J101MT +REF 00D2544464906
1U-3648	C-721		00MEY10700620	00MEY10700620	ELECT. CHIP	CE67C0J101MT +REF 00D2544464906
1U-3648	C-722		00MEY10700620	00MEY10700620	ELECT. CHIP	CE67C0J101MT +REF 00D2544464906
1U-3648	C-723		00MEY10700620	00MEY10700620	ELECT. CHIP	CE67C0J101MT +REF 00D2544464906
1U-3648	C-727		00MEY10700620	00MEY10700620	ELECT. CHIP	CE67C0J101MT +REF 00D2544464906
1U-3648	C-569		00MEY22700690	00MEY22700690	ELECT. CHIP	CE67C0J221MT(MVA) +REF 00D2544645903
1U-3648	C-570		00MEY22700690	00MEY22700690	ELECT. CHIP	CE67C0J221MT(MVA) +REF 00D2544645903
1U-3648	C-618		00MEY33601020	00MEY33601020	ELECT. CHIP	CE67C1A330MT +REF 00D2544575905
1U-3648	C-549		00MEY47601620	00MEY47601620	ELECT. CHIP	CE67C1C470MT +REF 00D2544465918
1U-3648	R-435		nsp	00MNN05000610	CHIP RESISTOR	RM73B--0R0KT +1608 00D2472018903
1U-3648	R-505		nsp	00MNN05000610	CHIP RESISTOR	RM73B--0R0KT +1608 00D2472018903
1U-3648	R-506		nsp	00MNN05000610	CHIP RESISTOR	RM73B--0R0KT +1608 00D2472018903
1U-3648	R-549		nsp	00MNN05000610	CHIP RESISTOR	RM73B--0R0KT +1608 00D2472018903
1U-3648	R-550		nsp	00MNN05000610	CHIP RESISTOR	RM73B--0R0KT +1608 00D2472018903
1U-3648	R-551		nsp	00MNN05000610	CHIP RESISTOR	RM73B--0R0KT +1608 00D2472018903
1U-3648	R-552		nsp	00MNN05000610	CHIP RESISTOR	RM73B--0R0KT +1608 00D2472018903
1U-3648	R-570		nsp	00MNN05000610	CHIP RESISTOR	RM73B--0R0KT +1608 00D2472018903
1U-3648	R-571		nsp	00MNN05000610	CHIP RESISTOR	RM73B--0R0KT +1608 00D2472018903
1U-3648	R-574		nsp	00MNN05000610	CHIP RESISTOR	RM73B--0R0KT +1608 00D2472018903
1U-3648	R-577		nsp	00MNN05000610	CHIP RESISTOR	RM73B--0R0KT +1608 00D2472018903
1U-3648	R-583		nsp	00MNN05000610	CHIP RESISTOR	RM73B--0R0KT +1608 00D2472018903
1U-3648	R-584		nsp	00MNN05000610	CHIP RESISTOR	RM73B--0R0KT +1608 00D2472018903
1U-3648	R-585		nsp	00MNN05000610	CHIP RESISTOR	RM73B--0R0KT +1608 00D2472018903
1U-3648	R-586		nsp	00MNN05000610	CHIP RESISTOR	RM73B--0R0KT +1608 00D2472018903
1U-3648	R-587		nsp	00MNN05000610	CHIP RESISTOR	RM73B--0R0KT +1608 00D2472018903
1U-3648	R-588		nsp	00MNN05000610	CHIP RESISTOR	RM73B--0R0KT +1608 00D2472018903
1U-3648	R-589		nsp	00MNN05000610	CHIP RESISTOR	RM73B--0R0KT +1608 00D2472018903
1U-3648	R-590		nsp	00MNN05000610	CHIP RESISTOR	RM73B--0R0KT +1608 00D2472018903
1U-3648	R-591		nsp	00MNN05000610	CHIP RESISTOR	RM73B--0R0KT +1608 00D2472018903
1U-3648	R-592		nsp	00MNN05000610	CHIP RESISTOR	RM73B--0R0KT +1608 00D2472018903
1U-3648	R-593		nsp	00MNN05000610	CHIP RESISTOR	RM73B--0R0KT +1608 00D2472018903
1U-3648	R-594		nsp	00MNN05000610	CHIP RESISTOR	RM73B--0R0KT +1608 00D2472018903
1U-3648	R-595		nsp	00MNN05000610	CHIP RESISTOR	RM73B--0R0KT +1608 00D2472018903
1U-3648	R-596		nsp	00MNN05000610	CHIP RESISTOR	RM73B--0R0KT +1608 00D2472018903
1U-3648	R-597		nsp	00MNN05000610	CHIP RESISTOR	RM73B--0R0KT +1608 00D2472018903

NOTE : “nsp” PARTS IS LISTED FOR REFERENCE ONLY, MARANTZ WILL NOT SUPPLY THESE PARTS.

P.C.B. NAME	POS. NO.	VERS. COLOR	PART NO. (FOR EUR)	PART NO. (MJI)	PART NAME	DESCRIPTION		
1U-3648	R-598		nsp	00MNN05000610	CHIP RESISTOR	RM73B--0R0KT	+1608	00D2472018903
1U-3648	R-620		nsp	00MNN05000610	CHIP RESISTOR	RM73B--0R0KT	+1608	00D2472018903
1U-3648	R-680		nsp	00MNN05000610	CHIP RESISTOR	RM73B--0R0KT	+1608	00D2472018903
1U-3648	R-681		nsp	00MNN05000610	CHIP RESISTOR	RM73B--0R0KT	+1608	00D2472018903
1U-3648	R-682		nsp	00MNN05000610	CHIP RESISTOR	RM73B--0R0KT	+1608	00D2472018903
1U-3648	R-683		nsp	00MNN05000610	CHIP RESISTOR	RM73B--0R0KT	+1608	00D2472018903
1U-3648	R-684		nsp	00MNN05000610	CHIP RESISTOR	RM73B--0R0KT	+1608	00D2472018903
1U-3648	R-685		nsp	00MNN05000610	CHIP RESISTOR	RM73B--0R0KT	+1608	00D2472018903
1U-3648	R-542		nsp	00MNN05000610	CHIP RESISTOR	RM73B--0R0KT	+1608	00D2472018903
1U-3648	R-741		nsp	00MNN05100610	CHIP RESISTOR	RM73B--100JT	+1608	00D2472002964
1U-3648	R-437		nsp	00MNN05220610	CHIP RESISTOR	RM73B--220JT	+1608	00D2472003947
1U-3648	R-438		nsp	00MNN05220610	CHIP RESISTOR	RM73B--220JT	+1608	00D2472003947
1U-3648	R-439		nsp	00MNN05220610	CHIP RESISTOR	RM73B--220JT	+1608	00D2472003947
1U-3648	R-440		nsp	00MNN05220610	CHIP RESISTOR	RM73B--220JT	+1608	00D2472003947
1U-3648	R-441		nsp	00MNN05220610	CHIP RESISTOR	RM73B--220JT	+1608	00D2472003947
1U-3648	R-442		nsp	00MNN05220610	CHIP RESISTOR	RM73B--220JT	+1608	00D2472003947
1U-3648	R-443		nsp	00MNN05220610	CHIP RESISTOR	RM73B--220JT	+1608	00D2472003947
1U-3648	R-444		nsp	00MNN05220610	CHIP RESISTOR	RM73B--220JT	+1608	00D2472003947
1U-3648	R-445		nsp	00MNN05220610	CHIP RESISTOR	RM73B--220JT	+1608	00D2472003947
1U-3648	R-446		nsp	00MNN05220610	CHIP RESISTOR	RM73B--220JT	+1608	00D2472003947
1U-3648	R-447		nsp	00MNN05220610	CHIP RESISTOR	RM73B--220JT	+1608	00D2472003947
1U-3648	R-448		nsp	00MNN05220610	CHIP RESISTOR	RM73B--220JT	+1608	00D2472003947
1U-3648	R-449		nsp	00MNN05220610	CHIP RESISTOR	RM73B--220JT	+1608	00D2472003947
1U-3648	R-621		nsp	00MNN05220610	CHIP RESISTOR	RM73B--220JT	+1608	00D2472003947
1U-3648	R-622		nsp	00MNN05220610	CHIP RESISTOR	RM73B--220JT	+1608	00D2472003947
1U-3648	R-623		nsp	00MNN05220610	CHIP RESISTOR	RM73B--220JT	+1608	00D2472003947
1U-3648	R-624		nsp	00MNN05220610	CHIP RESISTOR	RM73B--220JT	+1608	00D2472003947
1U-3648	R-625		nsp	00MNN05220610	CHIP RESISTOR	RM73B--220JT	+1608	00D2472003947
1U-3648	R-626		nsp	00MNN05220610	CHIP RESISTOR	RM73B--220JT	+1608	00D2472003947
1U-3648	R-627		nsp	00MNN05220610	CHIP RESISTOR	RM73B--220JT	+1608	00D2472003947
1U-3648	R-628		nsp	00MNN05220610	CHIP RESISTOR	RM73B--220JT	+1608	00D2472003947
1U-3648	R-629		nsp	00MNN05220610	CHIP RESISTOR	RM73B--220JT	+1608	00D2472003947
1U-3648	R-630		nsp	00MNN05220610	CHIP RESISTOR	RM73B--220JT	+1608	00D2472003947
1U-3648	R-631		nsp	00MNN05220610	CHIP RESISTOR	RM73B--220JT	+1608	00D2472003947
1U-3648	R-632		nsp	00MNN05220610	CHIP RESISTOR	RM73B--220JT	+1608	00D2472003947
1U-3648	R-633		nsp	00MNN05220610	CHIP RESISTOR	RM73B--220JT	+1608	00D2472003947
1U-3648	R-464		nsp	00MNN05330610	CHIP RESISTOR	RM73B--330JT	+1608	00D2472003989
1U-3648	R-465		nsp	00MNN05330610	CHIP RESISTOR	RM73B--330JT	+1608	00D2472003989
1U-3648	R-567		nsp	00MNN05330610	CHIP RESISTOR	RM73B--330JT	+1608	00D2472003989
1U-3648	R-635		nsp	00MNN05330610	CHIP RESISTOR	RM73B--330JT	+1608	00D2472003989
1U-3648	R-637		nsp	00MNN05330610	CHIP RESISTOR	RM73B--330JT	+1608	00D2472003989
1U-3648	R-638		nsp	00MNN05330610	CHIP RESISTOR	RM73B--330JT	+1608	00D2472003989
1U-3648	R-642		nsp	00MNN05330610	CHIP RESISTOR	RM73B--330JT	+1608	00D2472003989
1U-3648	R-643		nsp	00MNN05330610	CHIP RESISTOR	RM73B--330JT	+1608	00D2472003989
1U-3648	R-644		nsp	00MNN05330610	CHIP RESISTOR	RM73B--330JT	+1608	00D2472003989
1U-3648	R-767		nsp	00MNN05330610	CHIP RESISTOR	RM73B--330JT	+1608	00D2472003989
1U-3648	R-768		nsp	00MNN05330610	CHIP RESISTOR	RM73B--330JT	+1608	00D2472003989
1U-3648	R-769		nsp	00MNN05330610	CHIP RESISTOR	RM73B--330JT	+1608	00D2472003989
1U-3648	R-770		nsp	00MNN05330610	CHIP RESISTOR	RM73B--330JT	+1608	00D2472003989
1U-3648	R-771		nsp	00MNN05330610	CHIP RESISTOR	RM73B--330JT	+1608	00D2472003989
1U-3648	R-772		nsp	00MNN05330610	CHIP RESISTOR	RM73B--330JT	+1608	00D2472003989
1U-3648	R-773		nsp	00MNN05330610	CHIP RESISTOR	RM73B--330JT	+1608	00D2472003989
1U-3648	R-774		nsp	00MNN05330610	CHIP RESISTOR	RM73B--330JT	+1608	00D2472003989
1U-3648	R-520		nsp	00MNN05470610	CHIP RESISTOR	RM73B--470JT	+1608	00D2472004920
1U-3648	R-521		nsp	00MNN05470610	CHIP RESISTOR	RM73B--470JT	+1608	00D2472004920
1U-3648	R-522		nsp	00MNN05470610	CHIP RESISTOR	RM73B--470JT	+1608	00D2472004920
1U-3648	R-523		nsp	00MNN05470610	CHIP RESISTOR	RM73B--470JT	+1608	00D2472004920
1U-3648	R-516		nsp	00MNN05560610	CHIP RESISTOR	RM73B--560JT	+1608	00D2472004946
1U-3648	R-517		nsp	00MNN05560610	CHIP RESISTOR	RM73B--560JT	+1608	00D2472004946
1U-3648	R-518		nsp	00MNN05560610	CHIP RESISTOR	RM73B--560JT	+1608	00D2472004946
1U-3648	R-519		nsp	00MNN05560610	CHIP RESISTOR	RM73B--560JT	+1608	00D2472004946
1U-3648	R-501		nsp	00MNN05820610	CHIP RESISTOR	RM73B--820JT	+1608	00D2472004988
1U-3648	R-502		nsp	00MNN05101610	CHIP RESISTOR	RM73B--101JT	+1608	00D2472005903
1U-3648	R-527		nsp	00MNN05101610	CHIP RESISTOR	RM73B--101JT	+1608	00D2472005903
1U-3648	R-528		nsp	00MNN05101610	CHIP RESISTOR	RM73B--101JT	+1608	00D2472005903
1U-3648	R-611		nsp	00MNN05101610	CHIP RESISTOR	RM73B--101JT	+1608	00D2472005903
1U-3648	R-612		nsp	00MNN05101610	CHIP RESISTOR	RM73B--101JT	+1608	00D2472005903
1U-3648	R-613		nsp	00MNN05101610	CHIP RESISTOR	RM73B--101JT	+1608	00D2472005903
1U-3648	R-614		nsp	00MNN05101610	CHIP RESISTOR	RM73B--101JT	+1608	00D2472005903

NOTE : “nsp” PARTS IS LISTED FOR REFERENCE ONLY, MARANTZ WILL NOT SUPPLY THESE PARTS.

P.C.B. NAME	POS. NO.	VERS. COLOR	PART NO. (FOR EUR)	PART NO. (MJI)	PART NAME	DESCRIPTION		
1U-3648	R-615		nsp	00MNN05101610	CHIP RESISTOR	RM73B--101JT	+1608	00D2472005903
1U-3648	R-616		nsp	00MNN05101610	CHIP RESISTOR	RM73B--101JT	+1608	00D2472005903
1U-3648	R-617		nsp	00MNN05101610	CHIP RESISTOR	RM73B--101JT	+1608	00D2472005903
1U-3648	R-618		nsp	00MNN05101610	CHIP RESISTOR	RM73B--101JT	+1608	00D2472005903
1U-3648	R-634		nsp	00MNN05101610	CHIP RESISTOR	RM73B--101JT	+1608	00D2472005903
1U-3648	R-636		nsp	00MNN05101610	CHIP RESISTOR	RM73B--101JT	+1608	00D2472005903
1U-3648	R-639		nsp	00MNN05101610	CHIP RESISTOR	RM73B--101JT	+1608	00D2472005903
1U-3648	R-640		nsp	00MNN05101610	CHIP RESISTOR	RM73B--101JT	+1608	00D2472005903
1U-3648	R-641		nsp	00MNN05101610	CHIP RESISTOR	RM73B--101JT	+1608	00D2472005903
1U-3648	R-649		nsp	00MNN05101610	CHIP RESISTOR	RM73B--101JT	+1608	00D2472005903
1U-3648	R-650		nsp	00MNN05101610	CHIP RESISTOR	RM73B--101JT	+1608	00D2472005903
1U-3648	R-651		nsp	00MNN05101610	CHIP RESISTOR	RM73B--101JT	+1608	00D2472005903
1U-3648	R-652		nsp	00MNN05101610	CHIP RESISTOR	RM73B--101JT	+1608	00D2472005903
1U-3648	R-653		nsp	00MNN05101610	CHIP RESISTOR	RM73B--101JT	+1608	00D2472005903
1U-3648	R-654		nsp	00MNN05101610	CHIP RESISTOR	RM73B--101JT	+1608	00D2472005903
1U-3648	R-655		nsp	00MNN05101610	CHIP RESISTOR	RM73B--101JT	+1608	00D2472005903
1U-3648	R-691		nsp	00MNN05101610	CHIP RESISTOR	RM73B--101JT	+1608	00D2472005903
1U-3648	R-692		nsp	00MNN05101610	CHIP RESISTOR	RM73B--101JT	+1608	00D2472005903
1U-3648	R-693		nsp	00MNN05101610	CHIP RESISTOR	RM73B--101JT	+1608	00D2472005903
1U-3648	R-694		nsp	00MNN05101610	CHIP RESISTOR	RM73B--101JT	+1608	00D2472005903
1U-3648	R-736		nsp	00MNN05221610	CHIP RESISTOR	RM73B--221JT	+1608	00D2472005987
1U-3648	R-562		nsp	00MNN05471610	CHIP RESISTOR	RM73B--471JT	+1608	00D2472006960
1U-3648	R-536		nsp	00MNN05102610	CHIP RESISTOR	RM73B--102JT	+1608	00D2472007943
1U-3648	R-544		nsp	00MNN05102610	CHIP RESISTOR	RM73B--102JT	+1608	00D2472007943
1U-3648	R-556		nsp	00MNN05102610	CHIP RESISTOR	RM73B--102JT	+1608	00D2472007943
1U-3648	R-752		nsp	00MNN05102610	CHIP RESISTOR	RM73B--102JT	+1608	00D2472007943
1U-3648	R-753		nsp	00MNN05102610	CHIP RESISTOR	RM73B--102JT	+1608	00D2472007943
1U-3648	R-754		nsp	00MNN05102610	CHIP RESISTOR	RM73B--102JT	+1608	00D2472007943
1U-3648	R-508		nsp	00MNN05152610	CHIP RESISTOR	RM73B--152JT	+1608	00D2472007985
1U-3648	R-509		nsp	00MNN05152610	CHIP RESISTOR	RM73B--152JT	+1608	00D2472007985
1U-3648	R-510		nsp	00MNN05152610	CHIP RESISTOR	RM73B--152JT	+1608	00D2472007985
1U-3648	R-511		nsp	00MNN05152610	CHIP RESISTOR	RM73B--152JT	+1608	00D2472007985
1U-3648	R-512		nsp	00MNN05152610	CHIP RESISTOR	RM73B--152JT	+1608	00D2472007985
1U-3648	R-513		nsp	00MNN05152610	CHIP RESISTOR	RM73B--152JT	+1608	00D2472007985
1U-3648	R-514		nsp	00MNN05152610	CHIP RESISTOR	RM73B--152JT	+1608	00D2472007985
1U-3648	R-515		nsp	00MNN05152610	CHIP RESISTOR	RM73B--152JT	+1608	00D2472007985
1U-3648	R-558		nsp	00MNN05182610	CHIP RESISTOR	RM73B--182JT	+1608	00D2472008900
1U-3648	R-425		nsp	00MNN05202610	CHIP RESISTOR	RM73B--202JT	+1608	00D2472008913
1U-3648	R-426		nsp	00MNN05202610	CHIP RESISTOR	RM73B--202JT	+1608	00D2472008913
1U-3648	R-424		nsp	00MNN05222610	CHIP RESISTOR	RM73B--222JT	+1608	00D2472008926
1U-3648	R-433		nsp	00MNN05222610	CHIP RESISTOR	RM73B--222JT	+1608	00D2472008926
1U-3648	R-471		nsp	00MNN05222610	CHIP RESISTOR	RM73B--222JT	+1608	00D2472008926
1U-3648	R-472		nsp	00MNN05222610	CHIP RESISTOR	RM73B--222JT	+1608	00D2472008926
1U-3648	R-473		nsp	00MNN05222610	CHIP RESISTOR	RM73B--222JT	+1608	00D2472008926
1U-3648	R-474		nsp	00MNN05222610	CHIP RESISTOR	RM73B--222JT	+1608	00D2472008926
1U-3648	R-461		nsp	00MNN05272610	CHIP RESISTOR	RM73B--272JT	+1608	00D2472008942
1U-3648	R-423		nsp	00MNN05332610	CHIP RESISTOR	RM73B--332JT	+1608	00D2472008968
1U-3648	R-735		nsp	00MNN05392610	CHIP RESISTOR	RM73B--392JT	+1608	00D2472008984
1U-3648	R-670		nsp	00MNN05512610	CHIP RESISTOR	RM73B--512JT	+1608	00D2472009912
1U-3648	R-743		nsp	00MNN05562610	CHIP RESISTOR	RM73B--562JT	+1608	00D2472009925
1U-3648	R-733		nsp	00MNN05682610	CHIP RESISTOR	RM73B--682JT	+1608	00D2472009941
1U-3648	R-734		nsp	00MNN05822610	CHIP RESISTOR	RM73B--822JT	+1608	00D2472009967
1U-3648	R-414		nsp	00MNN05103610	CHIP RESISTOR	RM73B--103JT	+1608	00D2472009983
1U-3648	R-415		nsp	00MNN05103610	CHIP RESISTOR	RM73B--103JT	+1608	00D2472009983
1U-3648	R-416		nsp	00MNN05103610	CHIP RESISTOR	RM73B--103JT	+1608	00D2472009983
1U-3648	R-417		nsp	00MNN05103610	CHIP RESISTOR	RM73B--103JT	+1608	00D2472009983
1U-3648	R-418		nsp	00MNN05103610	CHIP RESISTOR	RM73B--103JT	+1608	00D2472009983
1U-3648	R-419		nsp	00MNN05103610	CHIP RESISTOR	RM73B--103JT	+1608	00D2472009983
1U-3648	R-420		nsp	00MNN05103610	CHIP RESISTOR	RM73B--103JT	+1608	00D2472009983
1U-3648	R-421		nsp	00MNN05103610	CHIP RESISTOR	RM73B--103JT	+1608	00D2472009983
1U-3648	R-422		nsp	00MNN05103610	CHIP RESISTOR	RM73B--103JT	+1608	00D2472009983
1U-3648	R-459		nsp	00MNN05103610	CHIP RESISTOR	RM73B--103JT	+1608	00D2472009983
1U-3648	R-460		nsp	00MNN05103610	CHIP RESISTOR	RM73B--103JT	+1608	00D2472009983
1U-3648	R-475		nsp	00MNN05103610	CHIP RESISTOR	RM73B--103JT	+1608	00D2472009983
1U-3648	R-476		nsp	00MNN05103610	CHIP RESISTOR	RM73B--103JT	+1608	00D2472009983
1U-3648	R-554		nsp	00MNN05103610	CHIP RESISTOR	RM73B--103JT	+1608	00D2472009983
1U-3648	R-555		nsp	00MNN05103610	CHIP RESISTOR	RM73B--103JT	+1608	00D2472009983
1U-3648	R-566		nsp	00MNN05103610	CHIP RESISTOR	RM73B--103JT	+1608	00D2472009983
1U-3648	R-568		nsp	00MNN05103610	CHIP RESISTOR	RM73B--103JT	+1608	00D2472009983

NOTE : “nsp” PARTS IS LISTED FOR REFERENCE ONLY, MARANTZ WILL NOT SUPPLY THESE PARTS.

P.C.B. NAME	POS. NO.	VERS. COLOR	PART NO. (FOR EUR)	PART NO. (MJI)	PART NAME	DESCRIPTION		
1U-3648	R-599		nsp	00MNN05103610	CHIP RESISTOR	RM73B--103JT	+1608	00D2472009983
1U-3648	R-603		nsp	00MNN05103610	CHIP RESISTOR	RM73B--103JT	+1608	00D2472009983
1U-3648	R-604		nsp	00MNN05103610	CHIP RESISTOR	RM73B--103JT	+1608	00D2472009983
1U-3648	R-609		nsp	00MNN05103610	CHIP RESISTOR	RM73B--103JT	+1608	00D2472009983
1U-3648	R-645		nsp	00MNN05103610	CHIP RESISTOR	RM73B--103JT	+1608	00D2472009983
1U-3648	R-646		nsp	00MNN05103610	CHIP RESISTOR	RM73B--103JT	+1608	00D2472009983
1U-3648	R-647		nsp	00MNN05103610	CHIP RESISTOR	RM73B--103JT	+1608	00D2472009983
1U-3648	R-656		nsp	00MNN05103610	CHIP RESISTOR	RM73B--103JT	+1608	00D2472009983
1U-3648	R-657		nsp	00MNN05103610	CHIP RESISTOR	RM73B--103JT	+1608	00D2472009983
1U-3648	R-658		nsp	00MNN05103610	CHIP RESISTOR	RM73B--103JT	+1608	00D2472009983
1U-3648	R-659		nsp	00MNN05103610	CHIP RESISTOR	RM73B--103JT	+1608	00D2472009983
1U-3648	R-677		nsp	00MNN05103610	CHIP RESISTOR	RM73B--103JT	+1608	00D2472009983
1U-3648	R-678		nsp	00MNN05103610	CHIP RESISTOR	RM73B--103JT	+1608	00D2472009983
1U-3648	R-679		nsp	00MNN05103610	CHIP RESISTOR	RM73B--103JT	+1608	00D2472009983
1U-3648	R-686		nsp	00MNN05103610	CHIP RESISTOR	RM73B--103JT	+1608	00D2472009983
1U-3648	R-690		nsp	00MNN05103610	CHIP RESISTOR	RM73B--103JT	+1608	00D2472009983
1U-3648	R-732		nsp	00MNN05103610	CHIP RESISTOR	RM73B--103JT	+1608	00D2472009983
1U-3648	R-739		nsp	00MNN05103610	CHIP RESISTOR	RM73B--103JT	+1608	00D2472009983
1U-3648	R-748		nsp	00MNN05103610	CHIP RESISTOR	RM73B--103JT	+1608	00D2472009983
1U-3648	R-749		nsp	00MNN05103610	CHIP RESISTOR	RM73B--103JT	+1608	00D2472009983
1U-3648	R-750		nsp	00MNN05103610	CHIP RESISTOR	RM73B--103JT	+1608	00D2472009983
1U-3648	R-751		nsp	00MNN05103610	CHIP RESISTOR	RM73B--103JT	+1608	00D2472009983
1U-3648	R-762		nsp	00MNN05103610	CHIP RESISTOR	RM73B--103JT	+1608	00D2472009983
1U-3648	R-557		nsp	00MNN05223610	CHIP RESISTOR	RM73B--223JT	+1608	00D2472010969
1U-3648	R-601		nsp	00MNN05223610	CHIP RESISTOR	RM73B--223JT	+1608	00D2472010969
1U-3648	R-666		nsp	00MNN05223610	CHIP RESISTOR	RM73B--223JT	+1608	00D2472010969
1U-3648	R-667		nsp	00MNN05223610	CHIP RESISTOR	RM73B--223JT	+1608	00D2472010969
1U-3648	R-668		nsp	00MNN05223610	CHIP RESISTOR	RM73B--223JT	+1608	00D2472010969
1U-3648	R-669		nsp	00MNN05223610	CHIP RESISTOR	RM73B--223JT	+1608	00D2472010969
1U-3648	R-699		nsp	00MNN05223610	CHIP RESISTOR	RM73B--223JT	+1608	00D2472010969
1U-3648	R-737		nsp	00MNN05223610	CHIP RESISTOR	RM73B--223JT	+1608	00D2472010969
1U-3648	R-744		nsp	00MNN05223610	CHIP RESISTOR	RM73B--223JT	+1608	00D2472010969
1U-3648	R-745		nsp	00MNN05223610	CHIP RESISTOR	RM73B--223JT	+1608	00D2472010969
1U-3648	R-746		nsp	00MNN05223610	CHIP RESISTOR	RM73B--223JT	+1608	00D2472010969
1U-3648	R-747		nsp	00MNN05223610	CHIP RESISTOR	RM73B--223JT	+1608	00D2472010969
1U-3648	R-763		nsp	00MNN05223610	CHIP RESISTOR	RM73B--223JT	+1608	00D2472010969
1U-3648	R-766		nsp	00MNN05223610	CHIP RESISTOR	RM73B--223JT	+1608	00D2472010969
1U-3648	R-553		nsp	00MNN05333610	CHIP RESISTOR	RM73B--333JT	+1608	00D2472011900
1U-3648	R-674		nsp	00MNN05333610	CHIP RESISTOR	RM73B--333JT	+1608	00D2472011900
1U-3648	R-675		nsp	00MNN05333610	CHIP RESISTOR	RM73B--333JT	+1608	00D2472011900
1U-3648	R-676		nsp	00MNN05333610	CHIP RESISTOR	RM73B--333JT	+1608	00D2472011900
1U-3648	R-560		nsp	00MNN05473610	CHIP RESISTOR	RM73B--473JT	+1608	00D2472011942
1U-3648	R-564		nsp	00MNN05473610	CHIP RESISTOR	RM73B--473JT	+1608	00D2472011942
1U-3648	R-565		nsp	00MNN05563610	CHIP RESISTOR	RM73B--563JT	+1608	00D2472011968
1U-3648	R-671		nsp	00MNN05563610	CHIP RESISTOR	RM73B--563JT	+1608	00D2472011968
1U-3648	R-672		nsp	00MNN05563610	CHIP RESISTOR	RM73B--563JT	+1608	00D2472011968
1U-3648	R-673		nsp	00MNN05563610	CHIP RESISTOR	RM73B--563JT	+1608	00D2472011968
1U-3648	R-561		nsp	00MNN05683610	CHIP RESISTOR	RM73B--683JT	+1608	00D2472011984
1U-3648	R-559		nsp	00MNN05104610	CHIP RESISTOR	RM73B--104JT	+1608	00D2472012925
1U-3648	R-524		nsp	00MNN05124610	CHIP RESISTOR	RM73B--124JT	+1608	00D2472012941
1U-3648	R-534		nsp	00MNN05124610	CHIP RESISTOR	RM73B--124JT	+1608	00D2472012941
1U-3648	R-563		nsp	00MNN05154610	CHIP RESISTOR	RM73B--154JT	+1608	00D2472012967
1U-3648	C-413		nsp	00MDD90020300	CERAMIC CAP.	CC73CH1H2R0CT	+1608	00D2570502942
1U-3648	C-414		nsp	00MDD90020300	CERAMIC CAP.	CC73CH1H2R0CT	+1608	00D2570502942
1U-3648	C-517		nsp	00MDD95220300	CERAMIC CAP.	CC73CH1H220JT	+1608	00D2570504908
1U-3648	C-518		nsp	00MDD95220300	CERAMIC CAP.	CC73CH1H220JT	+1608	00D2570504908
1U-3648	C-519		nsp	00MDD95220300	CERAMIC CAP.	CC73CH1H220JT	+1608	00D2570504908
1U-3648	C-520		nsp	00MDD95220300	CERAMIC CAP.	CC73CH1H220JT	+1608	00D2570504908
1U-3648	C-597		nsp	00MDD95101300	CERAMIC CAP.	CC73CH1H101JT	+1608	00D2570506951
1U-3648	C-634		nsp	00MDD95101300	CERAMIC CAP.	CC73CH1H101JT	+1608	00D2570506951
1U-3648	C-635		nsp	00MDD95101300	CERAMIC CAP.	CC73CH1H101JT	+1608	00D2570506951
1U-3648	C-539		nsp	00MDD95151300	CERAMIC CAP.	CC73CH1H151JT	+1608	00D2570506993
1U-3648	C-524		nsp	00MDK96331300	CERAMIC CAP.	CC73CH1H331JT	+1608	00D2570507976
1U-3648	C-588		nsp	00MDK96331300	CERAMIC CAP.	CC73CH1H331JT	+1608	00D2570507976
1U-3648	C-591		nsp	00MDK96331300	CERAMIC CAP.	CC73CH1H331JT	+1608	00D2570507976
1U-3648	C-592		nsp	00MDK96471300	CERAMIC CAP.	CC73CH1H471JT	+1608	00D2570508917
1U-3648	C-594		nsp	00MDK96471300	CERAMIC CAP.	CC73CH1H471JT	+1608	00D2570508917
1U-3648	C-446		nsp	00MDK96102300	CERAMIC CAP.	CK73B1H102KT	+1608	00D2570509929
1U-3648	C-529		nsp	00MDK96102300	CERAMIC CAP.	CK73B1H102KT	+1608	00D2570509929

NOTE : “nsp” PARTS IS LISTED FOR REFERENCE ONLY, MARANTZ WILL NOT SUPPLY THESE PARTS.

P.C.B. NAME	POS. NO.	VERS. COLOR	PART NO. (FOR EUR)	PART NO. (MJI)	PART NAME	DESCRIPTION		
1U-3648	C-531		nsp	00MDK96102300	CERAMIC CAP.	CK73B1H102KT	+1608	00D2570509929
1U-3648	C-540		nsp	00MDK96102300	CERAMIC CAP.	CK73B1H102KT	+1608	00D2570509929
1U-3648	C-615		nsp	00MDK96102300	CERAMIC CAP.	CK73B1H102KT	+1608	00D2570509929
1U-3648	C-633		nsp	00MDK96102300	CERAMIC CAP.	CK73B1H102KT	+1608	00D2570509929
1U-3648	C-513		nsp	00MDK96222300	CERAMIC CAP.	CK73B1H222KT	+1608	00D2570509990
1U-3648	C-514		nsp	00MDK96222300	CERAMIC CAP.	CK73B1H222KT	+1608	00D2570509990
1U-3648	C-515		nsp	00MDK96222300	CERAMIC CAP.	CK73B1H222KT	+1608	00D2570509990
1U-3648	C-516		nsp	00MDK96222300	CERAMIC CAP.	CK73B1H222KT	+1608	00D2570509990
1U-3648	C-522		nsp	00MDK96472300	CERAMIC CAP.	CK73B1H472KT	+1608	00D2570510934
1U-3648	C-523		nsp	00MDK96472300	CERAMIC CAP.	CK73B1H472KT	+1608	00D2570510934
1U-3648	C-631		nsp	00MDK96682300	CERAMIC CAP.	CK73B1H682KT	+1608	00D2570510950
1U-3648	C-632		nsp	00MDK96682300	CERAMIC CAP.	CK73B1H682KT	+1608	00D2570510950
1U-3648	C-639		nsp	00MDK96682300	CERAMIC CAP.	CK73B1H682KT	+1608	00D2570510950
1U-3648	C-406		nsp	00MDK96103300	CERAMIC CAP.	CK73B1H103KT (1608) +1608		00D2570501901
1U-3648	C-503		nsp	00MDK96103300	CERAMIC CAP.	CK73B1H103KT (1608) +1608		00D2570501901
1U-3648	C-536		nsp	00MDK96103300	CERAMIC CAP.	CK73B1H103KT (1608) +1608		00D2570501901
1U-3648	C-538		nsp	00MDK96103300	CERAMIC CAP.	CK73B1H103KT (1608) +1608		00D2570501901
1U-3648	C-561		nsp	00MDK96104300	CERAMIC CAP.	CK73B1E104KT	+1608	00D2570516954
1U-3648	C-636		nsp	00MDK96104300	CERAMIC CAP.	CK73B1E104KT	+1608	00D2570516954
1U-3648	C-731		nsp	00MDK96104300	CERAMIC CAP.	CK73B1E104KT	+1608	00D2570516954
1U-3648	C-598		nsp	00MDK96223200	CERAMIC CAP.	CK73B1E223KT	+1608	00D2570516909
1U-3648	C-599		nsp	00MDK96223200	CERAMIC CAP.	CK73B1E223KT	+1608	00D2570516909
1U-3648	C-562		nsp	00MDK96473200	CERAMIC CAP.	CK73B1E473KT	+1608	00D2570516941
1U-3648	C-581		nsp	00MDK96473200	CERAMIC CAP.	CK73B1E473KT	+1608	00D2570516941
1U-3648	C-521		nsp	00MDK96104300	CERAMIC CAP.	CK73B1E104KT	+1608	00D2570516954
1U-3648	C-532		nsp	00MDK96104300	CERAMIC CAP.	CK73B1E104KT	+1608	00D2570516954
1U-3648	C-533		nsp	00MDK96104300	CERAMIC CAP.	CK73B1E104KT	+1608	00D2570516954
1U-3648	C-554		nsp	00MDK96104300	CERAMIC CAP.	CK73B1E104KT	+1608	00D2570516954
1U-3648	C-534		nsp	00MDK96104300	CERAMIC CAP.	CK73B1E104KT	+1608	00D2570516954
1U-3648	C-535		nsp	00MDK96104300	CERAMIC CAP.	CK73B1E104KT	+1608	00D2570516954
1U-3648	C-537		nsp	00MDK96104300	CERAMIC CAP.	CK73B1E104KT	+1608	00D2570516954
1U-3648	C-534		nsp	00MDK96104300	CERAMIC CAP.	CK73B1E104KT	+1608	00D2570516954
1U-3648	C-535		nsp	00MDK96104300	CERAMIC CAP.	CK73B1E104KT	+1608	00D2570516954
1U-3648	C-537		nsp	00MDK96104300	CERAMIC CAP.	CK73B1E104KT	+1608	00D2570516954
1U-3648	C-595		nsp	00MDK96104300	CERAMIC CAP.	CK73B1E104KT	+1608	00D2570516954
1U-3648	C-525		nsp	00MDK98103300	CERAMIC CAP.	CK73F1H103ZT	+1608	00D2570511904
1U-3648	C-526		nsp	00MDK98103300	CERAMIC CAP.	CK73F1H103ZT	+1608	00D2570511904
1U-3648	C-548		nsp	00MDK98103300	CERAMIC CAP.	CK73F1H103ZT	+1608	00D2570511904
1U-3648	C-563		nsp	00MDK98103300	CERAMIC CAP.	CK73F1H103ZT	+1608	00D2570511904
1U-3648	C-564		nsp	00MDK98103300	CERAMIC CAP.	CK73F1H103ZT	+1608	00D2570511904
1U-3648	C-566		nsp	00MDK98103300	CERAMIC CAP.	CK73F1H103ZT	+1608	00D2570511904
1U-3648	C-572		nsp	00MDK98103300	CERAMIC CAP.	CK73F1H103ZT	+1608	00D2570511904
1U-3648	C-573		nsp	00MDK98103300	CERAMIC CAP.	CK73F1H103ZT	+1608	00D2570511904
1U-3648	C-575		nsp	00MDK98103300	CERAMIC CAP.	CK73F1H103ZT	+1608	00D2570511904
1U-3648	C-576		nsp	00MDK98103300	CERAMIC CAP.	CK73F1H103ZT	+1608	00D2570511904
1U-3648	C-578		nsp	00MDK98103300	CERAMIC CAP.	CK73F1H103ZT	+1608	00D2570511904
1U-3648	C-580		nsp	00MDK98103300	CERAMIC CAP.	CK73F1H103ZT	+1608	00D2570511904
1U-3648	C-582		nsp	00MDK98103300	CERAMIC CAP.	CK73F1H103ZT	+1608	00D2570511904
1U-3648	C-583		nsp	00MDK98103300	CERAMIC CAP.	CK73F1H103ZT	+1608	00D2570511904
1U-3648	C-596		nsp	00MDK98103300	CERAMIC CAP.	CK73F1H103ZT	+1608	00D2570511904
1U-3648	C-600		nsp	00MDK98103300	CERAMIC CAP.	CK73F1H103ZT	+1608	00D2570511904
1U-3648	C-601		nsp	00MDK98103300	CERAMIC CAP.	CK73F1H103ZT	+1608	00D2570511904
1U-3648	C-602		nsp	00MDK98103300	CERAMIC CAP.	CK73F1H103ZT	+1608	00D2570511904
1U-3648	C-604		nsp	00MDK98103300	CERAMIC CAP.	CK73F1H103ZT	+1608	00D2570511904
1U-3648	C-605		nsp	00MDK98103300	CERAMIC CAP.	CK73F1H103ZT	+1608	00D2570511904
1U-3648	C-606		nsp	00MDK98103300	CERAMIC CAP.	CK73F1H103ZT	+1608	00D2570511904
1U-3648	C-619		nsp	00MDK98103300	CERAMIC CAP.	CK73F1H103ZT	+1608	00D2570511904
1U-3648	C-620		nsp	00MDK98103300	CERAMIC CAP.	CK73F1H103ZT	+1608	00D2570511904
1U-3648	C-622		nsp	00MDK98103300	CERAMIC CAP.	CK73F1H103ZT	+1608	00D2570511904
1U-3648	C-623		nsp	00MDK98103300	CERAMIC CAP.	CK73F1H103ZT	+1608	00D2570511904
1U-3648	C-624		nsp	00MDK98103300	CERAMIC CAP.	CK73F1H103ZT	+1608	00D2570511904
1U-3648	C-625		nsp	00MDK98103300	CERAMIC CAP.	CK73F1H103ZT	+1608	00D2570511904
1U-3648	C-637		nsp	00MDK98103300	CERAMIC CAP.	CK73F1H103ZT	+1608	00D2570511904
1U-3648	C-403		nsp	00MDK98104200	CERAMIC CAP.	CK73F1E104ZT	+1608	00D2570512903
1U-3648	C-405		nsp	00MDK98104200	CERAMIC CAP.	CK73F1E104ZT	+1608	00D2570512903
1U-3648	C-407		nsp	00MDK98104200	CERAMIC CAP.	CK73F1E104ZT	+1608	00D2570512903
1U-3648	C-411		nsp	00MDK98104200	CERAMIC CAP.	CK73F1E104ZT	+1608	00D2570512903
1U-3648	C-412		nsp	00MDK98104200	CERAMIC CAP.	CK73F1E104ZT	+1608	00D2570512903
1U-3648	C-415		nsp	00MDK98104200	CERAMIC CAP.	CK73F1E104ZT	+1608	00D2570512903

NOTE : “nsp” PARTS IS LISTED FOR REFERENCE ONLY, MARANTZ WILL NOT SUPPLY THESE PARTS.

P.C.B. NAME	POS. NO.	VERS. COLOR	PART NO. (FOR EUR)	PART NO. (MJI)	PART NAME	DESCRIPTION		
1U-3648	C-416		nsp	00MDK98104200	CERAMIC CAP.	CK73F1E104ZT	+1608	00D2570512903
1U-3648	C-417		nsp	00MDK98104200	CERAMIC CAP.	CK73F1E104ZT	+1608	00D2570512903
1U-3648	C-418		nsp	00MDK98104200	CERAMIC CAP.	CK73F1E104ZT	+1608	00D2570512903
1U-3648	C-419		nsp	00MDK98104200	CERAMIC CAP.	CK73F1E104ZT	+1608	00D2570512903
1U-3648	C-421		nsp	00MDK98104200	CERAMIC CAP.	CK73F1E104ZT	+1608	00D2570512903
1U-3648	C-422		nsp	00MDK98104200	CERAMIC CAP.	CK73F1E104ZT	+1608	00D2570512903
1U-3648	C-424		nsp	00MDK98104200	CERAMIC CAP.	CK73F1E104ZT	+1608	00D2570512903
1U-3648	C-425		nsp	00MDK98104200	CERAMIC CAP.	CK73F1E104ZT	+1608	00D2570512903
1U-3648	C-426		nsp	00MDK98104200	CERAMIC CAP.	CK73F1E104ZT	+1608	00D2570512903
1U-3648	C-427		nsp	00MDK98104200	CERAMIC CAP.	CK73F1E104ZT	+1608	00D2570512903
1U-3648	C-428		nsp	00MDK98104200	CERAMIC CAP.	CK73F1E104ZT	+1608	00D2570512903
1U-3648	C-429		nsp	00MDK98104200	CERAMIC CAP.	CK73F1E104ZT	+1608	00D2570512903
1U-3648	C-432		nsp	00MDK98104200	CERAMIC CAP.	CK73F1E104ZT	+1608	00D2570512903
1U-3648	C-433		nsp	00MDK98104200	CERAMIC CAP.	CK73F1E104ZT	+1608	00D2570512903
1U-3648	C-434		nsp	00MDK98104200	CERAMIC CAP.	CK73F1E104ZT	+1608	00D2570512903
1U-3648	C-436		nsp	00MDK98104200	CERAMIC CAP.	CK73F1E104ZT	+1608	00D2570512903
1U-3648	C-437		nsp	00MDK98104200	CERAMIC CAP.	CK73F1E104ZT	+1608	00D2570512903
1U-3648	C-438		nsp	00MDK98104200	CERAMIC CAP.	CK73F1E104ZT	+1608	00D2570512903
1U-3648	C-442		nsp	00MDK98104200	CERAMIC CAP.	CK73F1E104ZT	+1608	00D2570512903
1U-3648	C-460		nsp	00MDK98104200	CERAMIC CAP.	CK73F1E104ZT	+1608	00D2570512903
1U-3648	C-465		nsp	00MDK98104200	CERAMIC CAP.	CK73F1E104ZT	+1608	00D2570512903
1U-3648	C-467		nsp	00MDK98104200	CERAMIC CAP.	CK73F1E104ZT	+1608	00D2570512903
1U-3648	C-469		nsp	00MDK98104200	CERAMIC CAP.	CK73F1E104ZT	+1608	00D2570512903
1U-3648	C-472		nsp	00MDK98104200	CERAMIC CAP.	CK73F1E104ZT	+1608	00D2570512903
1U-3648	C-502		nsp	00MDK98104200	CERAMIC CAP.	CK73F1E104ZT	+1608	00D2570512903
1U-3648	C-504		nsp	00MDK98104200	CERAMIC CAP.	CK73F1E104ZT	+1608	00D2570512903
1U-3648	C-506		nsp	00MDK98104200	CERAMIC CAP.	CK73F1E104ZT	+1608	00D2570512903
1U-3648	C-541		nsp	00MDK98104200	CERAMIC CAP.	CK73F1E104ZT	+1608	00D2570512903
1U-3648	C-546		nsp	00MDK98104200	CERAMIC CAP.	CK73F1E104ZT	+1608	00D2570512903
1U-3648	C-751		nsp	00MDK98104200	CERAMIC CAP.	CK73F1E104ZT	+1608	00D2570512903
1U-3648	C-752		nsp	00MDK98104200	CERAMIC CAP.	CK73F1E104ZT	+1608	00D2570512903
1U-3648	C-753		nsp	00MDK98104200	CERAMIC CAP.	CK73F1E104ZT	+1608	00D2570512903
1U-3648	C-547		nsp	00MDK98104200	CERAMIC CAP.	CK73F1E104ZT	+1608	00D2570512903
1U-3648	C-550		nsp	00MDK98104200	CERAMIC CAP.	CK73F1E104ZT	+1608	00D2570512903
1U-3648	C-555		nsp	00MDK98104200	CERAMIC CAP.	CK73F1E104ZT	+1608	00D2570512903
1U-3648	C-559		nsp	00MDK98104200	CERAMIC CAP.	CK73F1E104ZT	+1608	00D2570512903
1U-3648	C-568		nsp	00MDK98104200	CERAMIC CAP.	CK73F1E104ZT	+1608	00D2570512903
1U-3648	C-587		nsp	00MDK98104200	CERAMIC CAP.	CK73F1E104ZT	+1608	00D2570512903
1U-3648	C-607		nsp	00MDK98104200	CERAMIC CAP.	CK73F1E104ZT	+1608	00D2570512903
1U-3648	C-612		nsp	00MDK98104200	CERAMIC CAP.	CK73F1E104ZT	+1608	00D2570512903
1U-3648	C-616		nsp	00MDK98104200	CERAMIC CAP.	CK73F1E104ZT	+1608	00D2570512903
1U-3648	C-701		nsp	00MDK98104200	CERAMIC CAP.	CK73F1E104ZT	+1608	00D2570512903
1U-3648	C-702		nsp	00MDK98104200	CERAMIC CAP.	CK73F1E104ZT	+1608	00D2570512903
1U-3648	C-703		nsp	00MDK98104200	CERAMIC CAP.	CK73F1E104ZT	+1608	00D2570512903
1U-3648	C-704		nsp	00MDK98104200	CERAMIC CAP.	CK73F1E104ZT	+1608	00D2570512903
1U-3648	C-706		nsp	00MDK98104200	CERAMIC CAP.	CK73F1E104ZT	+1608	00D2570512903
1U-3648	C-708		nsp	00MDK98104200	CERAMIC CAP.	CK73F1E104ZT	+1608	00D2570512903
1U-3648	C-710		nsp	00MDK98104200	CERAMIC CAP.	CK73F1E104ZT	+1608	00D2570512903
1U-3648	C-711		nsp	00MDK98104200	CERAMIC CAP.	CK73F1E104ZT	+1608	00D2570512903
1U-3648	C-712		nsp	00MDK98104200	CERAMIC CAP.	CK73F1E104ZT	+1608	00D2570512903
1U-3648	C-714		nsp	00MDK98104200	CERAMIC CAP.	CK73F1E104ZT	+1608	00D2570512903
1U-3648	C-716		nsp	00MDK98104200	CERAMIC CAP.	CK73F1E104ZT	+1608	00D2570512903
1U-3648	C-718		nsp	00MDK98104200	CERAMIC CAP.	CK73F1E104ZT	+1608	00D2570512903
1U-3648	C-720		nsp	00MDK98104200	CERAMIC CAP.	CK73F1E104ZT	+1608	00D2570512903
1U-3648	C-724		nsp	00MDK98104200	CERAMIC CAP.	CK73F1E104ZT	+1608	00D2570512903
1U-3648	C-726		nsp	00MDK98104200	CERAMIC CAP.	CK73F1E104ZT	+1608	00D2570512903
1U-3648	C-730		nsp	00MDK98104200	CERAMIC CAP.	CK73F1E104ZT	+1608	00D2570512903
1U-3648	C-733		nsp	00MDK98104200	CERAMIC CAP.	CK73F1E104ZT	+1608	00D2570512903
1U-3648	C-734		nsp	00MDK98104200	CERAMIC CAP.	CK73F1E104ZT	+1608	00D2570512903
1U-3648	C-735		nsp	00MDK98104200	CERAMIC CAP.	CK73F1E104ZT	+1608	00D2570512903
1U-3648	C-737		nsp	00MDK98104200	CERAMIC CAP.	CK73F1E104ZT	+1608	00D2570512903
1U-3648	C-739		nsp	00MDK98104200	CERAMIC CAP.	CK73F1E104ZT	+1608	00D2570512903
1U-3648	C-741		nsp	00MDK98104200	CERAMIC CAP.	CK73F1E104ZT	+1608	00D2570512903
1U-3648	C-743		nsp	00MDK98104200	CERAMIC CAP.	CK73F1E104ZT	+1608	00D2570512903
1U-3648	C-744		nsp	00MDK98104200	CERAMIC CAP.	CK73F1E104ZT	+1608	00D2570512903
1U-3648	C-746		nsp	00MDK98104200	CERAMIC CAP.	CK73F1E104ZT	+1608	00D2570512903
1U-3648	C-764		nsp	00MDK98104200	CERAMIC CAP.	CK73F1E104ZT	+1608	00D2570512903
1U-3648	FB501		90M-FC900320R	90M-FC900320R	FERRITE CORE	CHIP EMIFIL(11A121) +1608		00D2350130903
1U-3648	FB506		90M-FC900320R	90M-FC900320R	FERRITE CORE	CHIP EMIFIL(11A121) +1608		00D2350130903

NOTE : “nsp” PARTS IS LISTED FOR REFERENCE ONLY, MARANTZ WILL NOT SUPPLY THESE PARTS.

P.C.B. NAME	POS. NO.	VERS. COLOR	PART NO. (FOR EUR)	PART NO. (MJI)	PART NAME	DESCRIPTION	
1U-3648	FB507		90M-FC900320R	90M-FC900320R	FERRITE CORE	CHIP EMIFIL(11A121) +1608	00D2350130903
1U-3648	FB401		90M-FC900330R	90M-FC900330R	FERRITE CORE	FBMJ1608HS280NT +1608	00D2350136907
1U-3648	FB402		90M-FC900330R	90M-FC900330R	FERRITE CORE	FBMJ1608HS280NT +1608	00D2350136907
1U-3648	FB703		90M-FC900330R	90M-FC900330R	FERRITE CORE	FBMJ1608HS280NT +1608	00D2350136907
1U-3648	FB706		90M-FC900330R	90M-FC900330R	FERRITE CORE	FBMJ1608HS280NT +1608	00D2350136907
1U-3648	D-701		00MHZ21303210	00MHZ21303210	CHIP TR.	1SS355 TE-17 +C	00D2760717903
1U-3648	D-703		00MHZ21303210	00MHZ21303210	CHIP TR.	1SS355 TE-17 +C	00D2760717903
1U-3648	D-704		00MHZ21303210	00MHZ21303210	CHIP TR.	1SS355 TE-17 +C	00D2760717903
1U-3648	D-702		00MHZ21303210	00MHZ21303210	CHIP TR.	1SS355 TE-17 +C	00D2760717903
1U-3648	D-731		00MHZ21303210	00MHZ21303210	CHIP TR.	1SS355 TE-17 +C	00D2760717903
1U-3648	IC701		00D2622977946	00D2622977946	IC	BA33BC0FP-E2 +REF	00D2622977946
1U-3648	IC702		00D2622977946	00D2622977946	IC	BA33BC0FP-E2 +REF	00D2622977946
1U-3648	CY082		nsp	nsp	JACK	8P PH CON.BASE(L) +REF	00D2050863981
1U-3648	CY251		nsp	nsp	JACK	25P FFC BASE(FMNSMT) +REF	00D2051174983
1U-3648	CY252		nsp	nsp	JACK	25P FFC BASE(FMNSMT) +REF	00D2051174983
1U-3648	FB502		00MFC90020100	00MFC90020100	FERRITE CORE	FB M J2125HM330-T +C	00D2350160902
1U-3648	FB503		00MFC90020100	00MFC90020100	FERRITE CORE	FB M J2125HM330-T +C	00D2350160902
1U-3648	FB504		00MFC90020100	00MFC90020100	FERRITE CORE	FB M J2125HM330-T +C	00D2350160902
1U-3648	FB505		00MFC90020100	00MFC90020100	FERRITE CORE	FB M J2125HM330-T +C	00D2350160902
1U-3648	FB704		00MFC90020100	00MFC90020100	FERRITE CORE	FB M J2125HM330-T +C	00D2350160902
1U-3648	FB705		00MFC90020100	00MFC90020100	FERRITE CORE	FB M J2125HM330-T +C	00D2350160902
1U-3648	FB707		00MFC90020100	00MFC90020100	FERRITE CORE	FB M J2125HM330-T +C	00D2350160902
1U-3648	FB708		00MFC90020100	00MFC90020100	FERRITE CORE	FB M J2125HM330-T +C	00D2350160902
1U-3648	R-545		00MNM11202020	00MNM11202020	CHIP RESISTOR	RM73B--123FT +1608	00D2472019960
1U-3648	C-404		00MEY47600620	00MEY47600620	ELECT. CHIP	CE67C0J470MT(MV) +REF	00D2544464964
1U-3648	C-501		00MEY47600620	00MEY47600620	ELECT. CHIP	CE67C0J470MT(MV) +REF	00D2544464964
1U-3648	C-528		00MEY47600620	00MEY47600620	ELECT. CHIP	CE67C0J470MT(MV) +REF	00D2544464964
1U-3648	C-530		00MEY47600620	00MEY47600620	ELECT. CHIP	CE67C0J470MT(MV) +REF	00D2544464964
1U-3648	C-589		nsp	00MDK96154200	CERAMIC CAP.	CK73B1A154KT +1608	00D2570520908
1U-3648	C-593		nsp	00MDK96154200	CERAMIC CAP.	CK73B1A154KT +1608	00D2570520908
1U-3648	C-509		00MEY47501050	00MEY47501050	TANTL.CAP CHIP	CS77B1A475MT +C	00D2572012906
1U-3648	IC703		00MHC98J18210	00MHC98J18210	IC	BA18BC0FP-E2 +C	00D2622977904
1U-3648	IC403		00MHC10209990	00MHC10209990	IC	AD8062-SO8 +C	00D2623195905
1U-3648	IC734		00MHC005605K0	00MHC005605K0	IC	TC74VHC74FT-EL +REF	00D2623197903
1U-3648	IC736		00MHC005805K0	00MHC005805K0	IC	TC74VHC157FT-EL +REF	00D2623198902
1U-3648	IC735		00MHC005105K0	00MHC005105K0	IC	TC74VHC00FT-EL +REF	00D2623200900
1U-3648	IC733		00MHC10098530	00MHC10098530	IC	S-80843CLNB-B64-T2 +C	00D2623206904
1U-3648	IC737		00D2623388903	00D2623388903	IC	AT24C04AN-10SI-1.8 +REF	00D2623388903
1U-3648	IC401		00MHC10081250	00MHC10081250	IC	CXD2753R +C	00D2623217003
1U-3648	IC704		00MHC98A26090	00MHC98A26090	IC	NJM2391DL1-26-TE1 +REF	00D2631182900
1U-3648	TR511		00MHX207982A0	00MHX207982A0	CHIP TR.	2SB798(DL/DK)-T1 +C	00D2720166905
1U-3648	TR512		00MHX207982A0	00MHX207982A0	CHIP TR.	2SB798(DL/DK)-T1 +C	00D2720166905
1U-3648	D-501		00MHZ21006000	00MHZ21006000	CHIP TR.	1SS300-TE85L +C	00D2760778900
1U-3648	IC402		00MHC10156990	00MHC10156990	IC	16M SDRAM(TSOP)-7/8 +C	00D2622875006
1U-3648	IC404		90M-HC108610R	90M-HC108610R	IC	EMP3128ATC100-10 HARMONY-8LI	00D2623282009
1U-3648	C-551		nsp	00MDK96105200	CERAMIC CAP.	CK73B1A105KT +1608	00D2570521907
1U-3648	CX131		nsp	nsp	JACK	13P FFC BASE(FMNSMT) +REF	00D2051174954
1U-3648	IC406		00MHC007705K0	00MHC007705K0	IC	TC7SHU04F-TE85L +REF	00D2623203907
1U-3648	IC405		00MHC007705K0	00MHC007705K0	IC	TC7SHU04F-TE85L +REF	00D2623203907
1U-3648	IC731		00D2623408003	00D2623408003	IC	M30624FGNGP-MZ0716	00D2623408003
1U-3648	IC732		90M-HC108620R	90M-HC108620R	IC	T14L1024N-12J(TAPE) +REF	00D2623310900
1U-3648	C-709		00MFM12223030	00MFM12223030	EMI FILTER	NFM41CC223R2A3L +C	00D2590015901
1U-3648	C-749		00MFM12223030	00MFM12223030	EMI FILTER	NFM41CC223R2A3L +C	00D2590015901
1U-3648	C-742		00MFM12223030	00MFM12223030	EMI FILTER	NFM41CC223R2A3L +C	00D2590015901
1U-3648	C-748		00MFM12223030	00MFM12223030	EMI FILTER	NFM41CC223R2A3L +C	00D2590015901
1U-3648	C-750		00MFM12223030	00MFM12223030	EMI FILTER	NFM41CC223R2A3L +C	00D2590015901
1U-3648	X-731		00MFQ01605120	00MFQ01605120	SERAMIC VIB.	CSTCE16MOV53-R0 +2125	00D3990887903
1U-3648	CX052		nsp	nsp	JACK	5P PH CON.BASE(L) +REF	00D2050863952
1U-3648	IC501		90M-HC108630R	90M-HC108630R	IC	CXD1881AR +C	00D2623219001
1U-3648	IC502		90M-HC108640R	90M-HC108640R	IC	CXD1885Q +C	00D2623218002
1U-3648	IC503		00MHC10210990	00MHC10210990	IC	M11L16161SA-45T +REF	00D2623210000
1U-3648	IC505		90M-HC108650R	90M-HC108650R	IC	AN8471SA +C	00D2631109909
1U-3648	IC507		00MHC700805S0	00MHC700805S0	IC	TC7S08FTE85L +C	00D2621782909
1U-3648	IC508		90M-HC108660R	90M-HC108660R	IC	FAN8042 +C	00D2623221002
1U-3648	CX241		nsp	nsp	JACK	24P FFC BASE(FLZ-SM1 +REF	00D2051152905
1U-3648	CX151		nsp	nsp	JACK	15P FFC BASE(P=1.0)L +REF	00D2051224901
1U-3648	RA501		00MBW05103320	00MBW05103320	RESISTOR COMPO.	MNR14=103JE0 +C	00D2479007917
1U-3648	RA502		00MBW05103320	00MBW05103320	RESISTOR COMPO.	MNR14=103JE0 +C	00D2479007917
1U-3648	RA503		00MBW05103320	00MBW05103320	RESISTOR COMPO.	MNR14=103JE0 +C	00D2479007917

NOTE : “nsp” PARTS IS LISTED FOR REFERENCE ONLY, MARANTZ WILL NOT SUPPLY THESE PARTS.

P.C.B. NAME	POS. NO.	VERS. COLOR	PART NO. (FOR EUR)	PART NO. (MJI)	PART NAME	DESCRIPTION	
1U-3648	RA504		00MBW05103320	00MBW05103320	RESISTOR COMPO.	MNR14=103JE0 +C	00D2479007917
1U-3648	RA401		90M-BW000350R	90M-BW000350R	RESISTOR COMPO.	MNR14=220JE0AB +C	00D2479003908
1U-3648	RA402		90M-BW000350R	90M-BW000350R	RESISTOR COMPO.	MNR14=220JE0AB +C	00D2479003908
1U-3648	R-605		nsp	00MNN05010610	CHIP RESISTOR	RM73B--010KT +1608	00D2472018916
1U-3648	R-606		nsp	00MNN05010610	CHIP RESISTOR	RM73B--010KT +1608	00D2472018916
1U-3648	R-607		nsp	00MNN05010610	CHIP RESISTOR	RM73B--010KT +1608	00D2472018916
1U-3648	R-608		nsp	00MNN05010610	CHIP RESISTOR	RM73B--010KT +1608	00D2472018916
1U-3648	R-538		nsp	00MNN05181610	CHIP RESISTOR	RM73B--181JT +1608	00D2472005961
1U-3648	R-539		nsp	00MNN05473610	CHIP RESISTOR	RM73B--473JT +1608	00D2472011942
1U-3648	R-537		nsp	00MNN05104610	CHIP RESISTOR	RM73B--104JT +1608	00D2472012925
1U-3648	R-540		nsp	00MNN05104610	CHIP RESISTOR	RM73B--104JT +1608	00D2472012925
1U-3648	TR513		90M-HX300090R	90M-HX300090R	CHIP TR.	2SC2412KT96(S) +C	00D2730384900
1U-3648	CX033		nsp	nsp	JACK	3P PH CON.BASE(L) +REF	00D2050863936

NOTE : “nsp” PARTS IS LISTED FOR REFERENCE ONLY, MARANTZ WILL NOT SUPPLY THESE PARTS.